PALMER
INSTRUMENTS, INC.

INDUSTRIAL THERMOMETERS

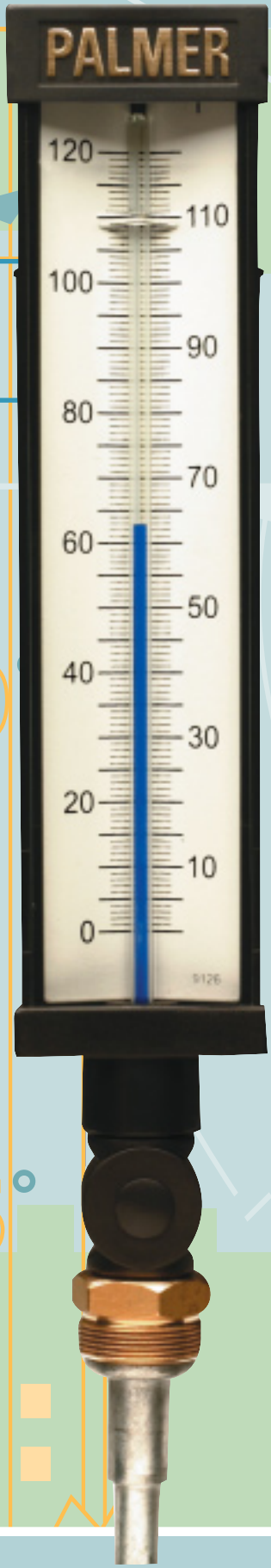

New! Sky Blue Fill
Economy Line
Classic Line
Prover Tank
Air Duct
Water Lines
Narrow Case
All Angle
Multi-Sensing

PALMER Wahl
INSTRUMENTATION GROUP

Model 9AL • 9FL • 9ALSB • 9FLSB Economy Industrial Thermometers

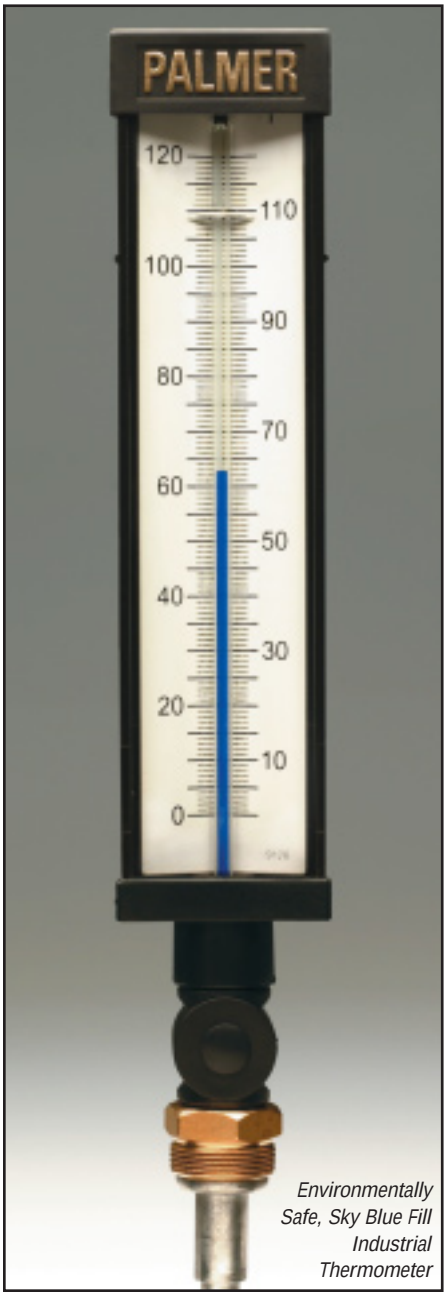

Environmentally Safe, Sky Blue Fill Industrial Thermometer

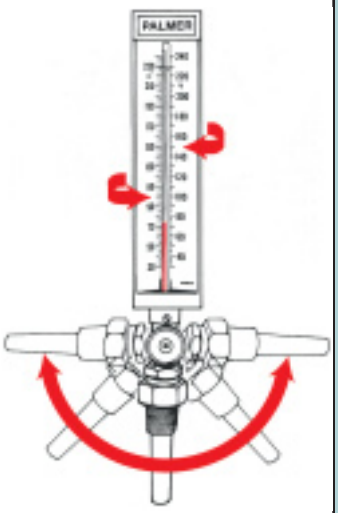

• ***NEW*** **"SKY BLUE" Fill (SB) Environmentally Safe Models** are filled with a non-toxic, mercury-free Blue Liquid. **SB** Models are available in 9" Cases, with either 3-1/2" or 6" Stem Lengths, Ranges up to 300°F. Optional Red Spirit Fill also available.

• **Flex Angle Adjustment:** Just two screws permit cases to be rotated 180° and stems to be positioned in 10° increments. Users can "infinitely" adjust Economy Line Industrial Thermometers to virtually any viewing angle required.

• **Easy Readability:** Standard Lens front glass tube is "Red Reading" Mercury-Filled or Sky Blue Fill. Compact, yet visible 9" (229mm) Plastic or Aluminum, or 12" (305mm) Aluminum (only) cases, fitted with a "V" shaped white aluminum scale graduated with bold black lines and numerals.

• **Accuracy:** Economy Line Industrial Thermometers are calibrated against standards traceable to the National Institute of Standards and Technology (NIST) and are guaranteed accurate to ±1 scale division.

• **Construction:** User selection of either tough, black-finished molded high temperature Plastic Case (**9FL** Models) or extruded, black-finished Aluminum Case (**9AL** or **12AL** Models). Glass crystal, machined Brass Swivel Nut, and cast aluminum stem and seat are standard on all 3-1/2" stems.

• **Connection Assembly:** Tapered Bulb Chamber allows maximum metal-to-metal contact with matching tapered thermowell for fast response and increased accuracy. Brass Swivel Nut is industry standard 1-1/4" -18 UNEF thread.

• **Range and Stem Length Selection:** Full selection of Fahrenheit or Dual F & C Range scales available from -40 to 550°F (-40 to 290°C). Stock stem lengths are 3.5" (89 mm), 6" (152 mm), 8" (203 mm), 9" (229 mm), and 12" (305 mm).

• **Air Duct Construction:** Air Duct Models feature a super-sensitive bare bulb protected by a 3/4" diameter perforated brass bulb guard. This design allows exposure to circulating air while still protecting the glass tube from any impact.

Temperature Range Codes

°F Range Codes	Div	Dual, °F & °C Range Codes	Div
-40/110F	2°F	**-40/110F / -40/43C**	2°F/2°C
0/120F	1°F	**0/120F / -17/49C**	1°F/0.5°C
0/160F	2°F	**0/160F / -17/71C**	1°F/0.5°C
20/180F	2°F	**20/180F / -6/82C**	2°F/1°C
30/240F	2°F	**30/240F / 0/115C**	2°F/1°C
30/300F	2°F	**30/300F / -11/49C**	2°F/1°C
AL only **50/400F***	5°F	**50/400F / 10/204C***	5°F/2°C
AL only **100/550F***	5°F	**100/550F / 40/290C***	5°F/2°C

** Not available in environmentally safe "Sky Blue" Fill*

Base Model Numbers

	Aluminum Case				Plastic Case			
	Mercury Fill		Sky Blue Fill		Mercury Fill		Sky Blue Fill	
Case Size	9" Scale*	9" Scale*	9" Scale*	9" Scale*	9" Scale	9" Scale	9" Scale	9" Scale
Bulb Type	Tapered	Air Duct	Tapered	Air Duct	Tapered	Air Duct	Tapered	Air Duct
Stem Length:								
3.5" (89mm)	**9AL3.5**	N/A	**9ALSB3.5**	N/A	**9FL3.5**	N/A	**9FLSB3.5**	N/A
6" (152mm)	**9AL6**	**9ALAD6**	**9ALSB6**	**9ALADSB6**	**9FL6**	**9FLAD6**	**9FLSB6**	**9FLADSB6**
8" (203mm)	**9AL8**	N/A	**9AL8****	N/A	**9FL8**	N/A	**9FL8****	N/A
9" (229mm)	**9AL9**	N/A	**9AL9****	N/A	**9FL9**	N/A	**9FL9****	N/A
12" (305mm)	**9AL12**	**9ALAD12**	**9AL12****	**9ALAD12****	**9FL12**	**9FLAD12**	**9FL12****	**9FLAD12****

** Optional 12" Aluminum Case available. ** Available in Red Spirit Fill only, add Code "**RS**" to Model Number*

Model 9AL • 9FL • 9ALSB • 9FLSB

Specifications

Form	All Angle Adjustable
Case	Painted Aluminum (**AL**) or molded Plastic (**FL**)
Case Size	9" (220mm) Plastic or Aluminum Case, optional 7" and 12" available
Stem Material	Standard cast Aluminum Stem and Seat
Stem Length	Listed in "Base Model" table, pg 2
Ranges	Listed in "Range" table, pg 2
Bulb	Choice of tapered Bulb Chamber or perforated Air Duct design
Fitting	1-1/4" - 18 UNEF machined Brass Swivel Nut
Scale Face	High visibility V-shaped painted white aluminum scale, black markings
Glass Tube	"Red Reading" Mercury Fill, Sky Blue Fill, Red Spirit Fill optional
Crystal	Glass Crystal Standard
Accuracy	Accurate to ±1 scale division
Calibration	Calibrated to NIST traceable standards
Warranty	One year limited warranty

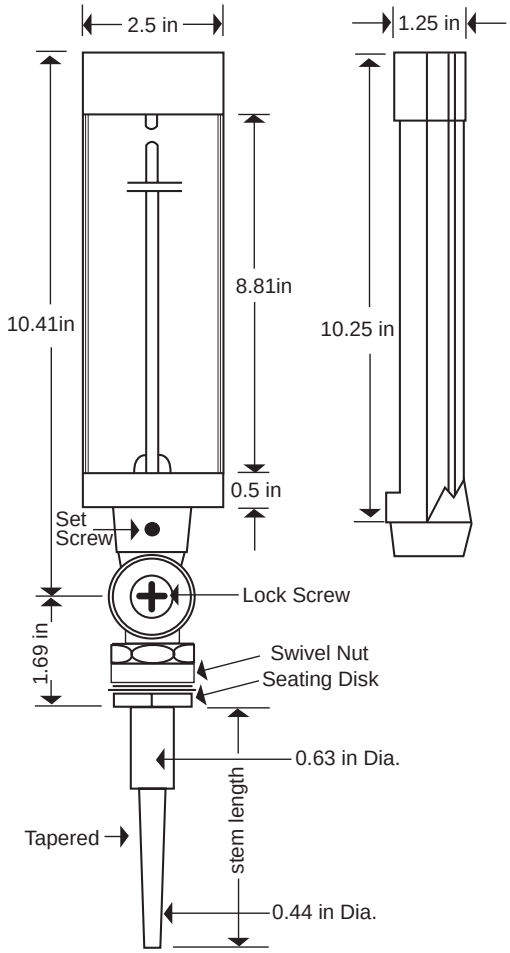

Dimensions for 9" Case Models

Option Codes

Options Description	How to Order
7" (178 mm) Case (Sky Blue not available)	Substitute "**7**" in place of "**9**" inch Scale in Base Model No. Table
12" (305 mm) Case (Sky Blue not available)	Substitute "**12**" in place of "**9**" inch Scale in Base Model No. Table
Brass Stem and Seat	Option code "**B**"
Plastic Crystal	Option code "**PC**"
Red Spirit Fill (300°F/150°C limit)	Option code "**RS**"
Stainless Steel Stem/Seat material	Option code "**S**"
Adjustable, Tilting Air Duct Flange	Order Part No. "**58**" as a separate item
Flanged Union Connection	Order Part No. **1140-9** or **1141-9**, see p.6

	Base Model No.	Temp. Range	Option Code
Sample Model Number	**9FLAD6**	**30/240F & C**	**B**
Sample Description	9" Case Plastic Case Air Duct 6" Stem	30/240°F & 0/114°C Dual Scale Range	Brass Stem and Seat

Economy Thermowells

	REGULAR SERIES THERMOWELLS			LAGGING EXTENSION THERMOWELLS			
Well Material	**Stem lgth. "S"**	**Insertion lgth. "U"**	**Model No.**	**Stem lgth. "S"**	**Insertion lgth. "U"**	**Lagging Ext. "T"**	**Model No.**
Cast Brass	3.5"	2.5"	**1140-203-01A**	3.5"	1.75"	1"	**1141-203-01A**
Cast Brass	6"	5"	**1140-206-01A**	6"	2.5"	2.5"	**1141-206-01A**
Mach. Brass	8"	7"	**1140-208-01**	8"	4"	3"	**1141-208-01**
Mach. Brass	9"	8"	**1140-209-01**	9"	5"	3"	**1141-209-01**
Mach. Brass	12"	11"	**1140-212-01**	12"	8"	3"	**1141-212-01**

For a full listing of Industrial Thermometer Thermowells and Union Connections, Please Request catalog No. 1100

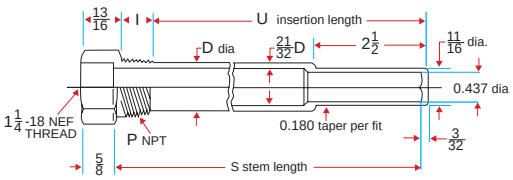

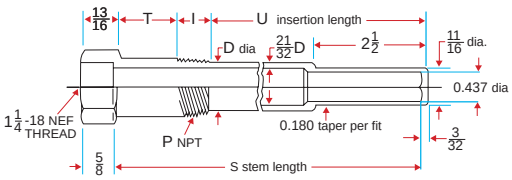

Air Duct Stem Model with Bare Bulb

Calibration Services Available

200 Series • 300 Series Classic Industrials

Mercury Thermometers are the most reliable thermometers in the world. Palmer Industrial Thermometers set industry standards for accuracy, quality, and rugged operation. With looks to match their performance, these classic thermometers are designed and constructed for long-term industrial process service. For some applications requiring maximum response time using a union instead of a thermowell, specify one piece stem and bulb.

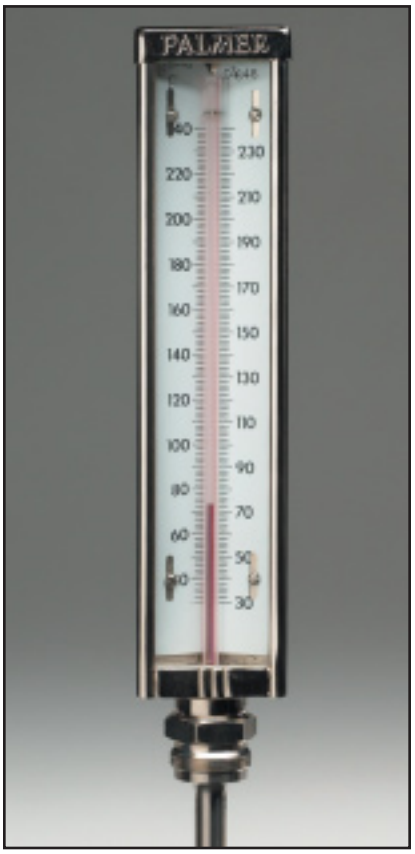

Model 209 Straight Industrial Thermometer

SPECIFICATIONS	
Case	Extruded "V" shaped brass with chrome finish in 9" or 12" size
Case Styles	Straight, 90° Back Angle, Left Side, Right Side, Incline, or Recline Angle
Glass Tube	Red Reading lens glass thoroughly annealed & aged for permanent accuracy. Individually calibrated.
Scales	Numerals and graduations are either printed on a painted metal scale, or individually engraved for each glass tube. See table below. Optional Dual Scales available
Connection	1-1/4" UNEF-18 Brass Swivel Nut connection is standard. Stainless Steel optional
Bulb:	Tapered design for maximum contact and heat transfer from Thermowell Stem and Bulb are Stainless Steel
Crystal Glass	Instrument Quality Glass, Plastic optional
Fill	"Red Reading" Mercury Fill Standard, Red Spirit Fill optional
Styles	Standard Case styles, Ranges and Stem Lengths are listed below Contact the factory for custom models and special needs
Accuracy	±1/2 scale division, ±1 scale division if Red Spirit Filled. Special calibration from customer-supplied set points available
Wells & Fittings	Palmer Industrial Thermowells are listed in Palmer Catalog PW1100

STANDARD RANGE CODES

CODE °F	9" CASE DIV	12" CASE DIV *	CODE °C	9" CASE DIV	12" CASE DIV
0/100F	1°	0.5° *	-18/40C	1°	0.5°
0/100F&R	1°	0.5° *	0/80C	1°	0.5°
30/180F	2°	1° *	0/115C	1°	1°
30/240F	2°	2° *	0/150C	2°	1°
170/270F&P	1°	1° *	10/205C	2°	2°
30/300F	2°	2° *			
50/400F	5°	2° *			
200/400F	2°	2° *			

* Engraved Scale Standard

OPTIONAL RANGE CODES (ENGRAVED SCALES)

CODE °F	9" CASE DIV	12" CASE DIV	CODE °C	9" CASE DIV	12" CASE DIV
-40/110F	2°	1°	-40/45C	1°	0.5°
-30/130F	2°	1°	40/265C	2°	2°
0/160F	2°	1°	95/405C	2°	2°
170/270F	1°	1°			
180/360F	2°	2°			
180/360F&P	2°	1°			
200/300F	1°	1°			
250/400F	2°	2°			
100/550F	5°	5°			
150/600F	5°	5°			
200/750F	5°	5°			

BASE MODEL NUMBERS

CASE STYLE	200 SERIES 12" SCALE	300 SERIES 9" SCALE
Straight	209	309
Left Side Angle*	268L	368L
Right Side Angle*	268R	368R
Back Angle 90˚	229	329
Incline 30˚ Angle	249-30I	349-30I
Incline 45˚ Angle	249-45I	349-45I
Recline 30˚ Angle	249-30R	349-30R
Recline 45˚ Angle	249-45R	349-45R
Recline 75˚ Angle	249-75R	349-75R
Recline 105˚ Angle	249-105R	349-105R

** Example to show position of Stem to Case*

Left Side Mount

Right Side Mount

Calibration Services Available

200 Series • 300 Series

Case Configuration for 45˚ Recline

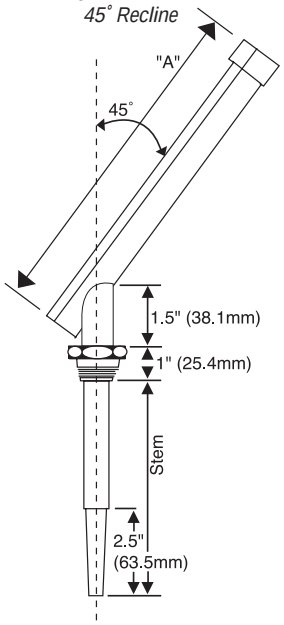

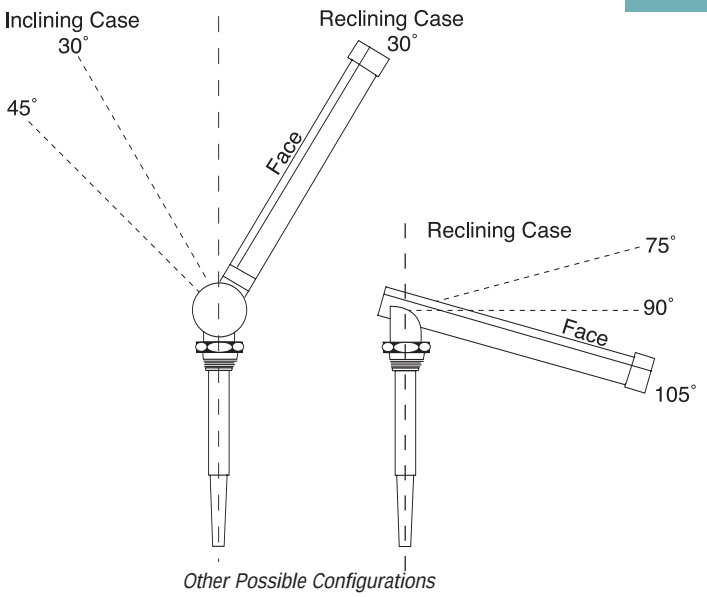

Other Possible Configurations

Straight Case Configuration

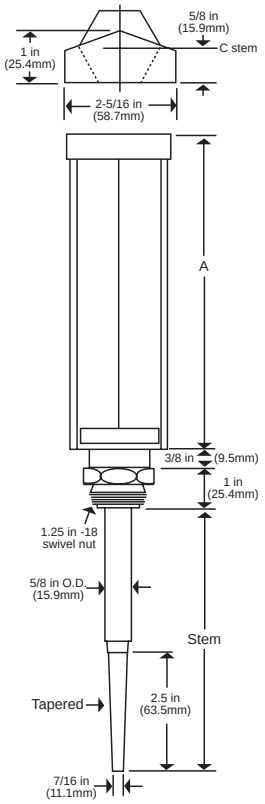

Ordering Information

To select a thermometer, please specify the following:

1) Base Model Code for case size and case style from the table on page 4.
2) Stem Length Code from the table to the right.
3) Range Code from tables on page 4.
4) Specify any required options from the Option Codes table below.

Option Codes

Option	Code	Option	Code
Case Drain Holes	**DH**	Dual Scale	**DS**
One-Piece Stem/Bulb	**OPS**	Red Spirit Fill (up to 300°F)	**RS**
Special Engraved Scale	**ES**	304 SS Swivel Nut	**SN**
Plastic Crystal	**PC**		

Sample Model Number	**329**	**3.5**	**30/240F**	**(RS)**
Sample Description	90° Back Angle, 9" Case	3.5" Stem Length	30 to 240°F Range	Red Spirit Fill Option

Stem Length Codes

CODE	LENGTH	
	IN.	MM
3.5	3.5	89
6	6	152.4
8	8	203
12	12	305
18	18	457
24	24	610
30	30	762
36	36	914
42	42	1067
48	48	1219

Prover Tank Industrial Thermometers

Prover Tank Thermometers

- Range: **10/ to 120°F**, (1/2° divisions)
- Over-range reservoir to 150°F
- Nickel Scale to resist gasoline vapors.
- 12" Case only

PROVER TANK 12" Base Model Numbers

Stem Length	Straight	90° Back Angle	Left Side Mount	Right Side Mount	30° Incline Mount	30° Recline Mount
3.5”	**210P3.5**	**210PBA3.5**	**210PLS3.5**	**210PRS3.5**	**210PI3.5**	**210PR3.5**
6”	**210P6**	**210PBA6**	**210PLS6**	**210PRS6**	**210PI6**	**210PR6**
8”	**210P8**	**210PBA8**	**210PLS8**	**210PRS8**	**210PI8**	**210PR8**
12”	**210P12**	**210PBA12**	**210PLS12**	**210PRS12**	**210PI12**	**210PR12**

NOTE: Longer Stem Lengths available on request.
*Add Range Code (**10/120F**) to Base Model Number above to complete a Prover Tank Model number.*

Calibration Services Available

6FL • 6FB
Compact Industrial Thermometers

THIS PRODUCT HAS BEEN DISCONTINUED

Palmer Compact Industrial Thermometers are designed to be rugged, accurate, and easy to read. They are ideal for installations where space is a factor. Compact Industrials are the economical choice for temperature measurement in various applications:

- Chilled Water Lines
- Steam Lines
- General Construction
- Hot Water Lines
- Air Ducts

- 6.5" (165mm) Molded High Temperature Plastic Case with Brass Thermowell
- Straight or 90° Back Angle Case Style, 1/2" NPT Connection
- Temperature ranges from -10 to 400°F
- Removable Glass Crystal
- Red Spirit Filled Magnifying Glass Lens Tubes for high visibility and easy reading
- Standard Compact Industrials feature a Bulb Chamber and are supplied with 1/2" NPT Separable Thermowell
- Standard Stem Length of 2"

Compact Industrial Model 6FLW2 supplied with Separable Thermowell shown below

Available in Straight or 90° Back Angle Case Styles

Base Model Numbers

Case Style	6.5" Case
Straight	6FLW2
90° Back Angle	6FBW2

Range Codes

°F Ranges*	Code	Div
-10 to 110°F	-10/110F	2°
-20 to 120°F	-20/120F	2°
0 to 160°F	0/160F	2°
30 to 240°F	30/240F	2°
50 to 400°F	50/400F	5°

** Dual Scales also available*

Ordering Information

To select a Compact Thermometer, please specify the following:

1) Base Model Number from the table above.
2) Stem Length Code, 2" Standard.
3) Range Code from table above.

Sample Model Number	6FBW	2	-20/120F
Sample Description	6.5" Case Back Angle with Thermowell	2" Stem Length	-20 to 120°F Range

Calibration Services Available

7AA Series Thermometers

Industrial Thermometers
Narrow Case

7AA All Angle thermometer with Brass Thermowell

New Product!!! Quality and Economy in a space-saving Narrow Case Industrial Thermometer. 1-11/32" wide, 6-1/2" long case, also includes Brass Thermowell.
Features **Flex Angle Adjustment:** one screw permits stem to be positioned so users can adjust the thermometer to the viewing angle required. See page 8 of catalog for Wide Case Models.

The 7AA has replaced the 6AA, and the 6000 Series has been discontinued.

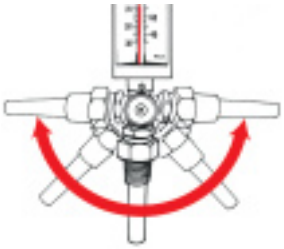

7AA All Angle thermometer can be adjusted to desired angle.

Specifications	
Case	6-1/2" (165.1mm) Long, 1-11/32" (34mm) Width Narrow Case, Blue Painted Aluminum
Tube	Magnified Lens, Compact, yet visible
Scale	Black Numerals and Graduations on aluminum scale
Crystal	Plastic Crystal and Cover
Fill	"SKY BLUE" Fill, a non-toxic, mercury-free Blue Liquid.
Accuracy	±1% of Full Scale
Swivel Nut	Blue Painted All Angle Aluminum
Thermowell	1/2" NPT Brass Thermowell with 0.531" Diameter

Base Model Number	
MODEL	CASE STYLE
7AA	ALL ANGLE

Stem Length Code		
CODE	LENGTH	
	IN	MM
2.25	2.25	57.2

Range Code	
°F CODE	DIV
0/160F	2°
30/240F	2°

Ordering Information

To select a 7AA Series Thermometer, please specify the following:

1) Base Model Number from the tables above.
2) Stem Length Code from the table above.
3) Range Code from table above.

Model Number Example		
7AA	**2.25**	**0/160F**

Important Note: the new 7AA replaces our Model 6AA. For further information, and a detailed drawing comparing both models, please contact our Sales Office at 1-800-421-2843.

Model 3AA • 2AA
All Angle Thermometers

Palmer All Angles are a versatile solution to many problems encountered in ordering, stocking, and replacing Industrial Thermometers. One thermometer can be "infinitely" adjusted to virtually any installation and viewing angle, greatly simplifying engineering and purchasing operations. Their versatility also aids in keeping both the inventory of "back-up" replacement thermometers and process down time at a minimum.

- **Model 3AA** 9" Long (229mm) Wide Case or **Model 2AA** 12" Long (178mm) Wide Case
- Red Reading, Mercury-Filled tubes for high visibility & accuracy, Red Spirit Fill optional
- 1-1/4"-18 UNEF Brass Swivel Nut for fast, easy installation
- Durable, rugged design for maximum versatility
- Accuracy within 1/2 scale division
- Full choice of stem lengths, temperature ranges, and options

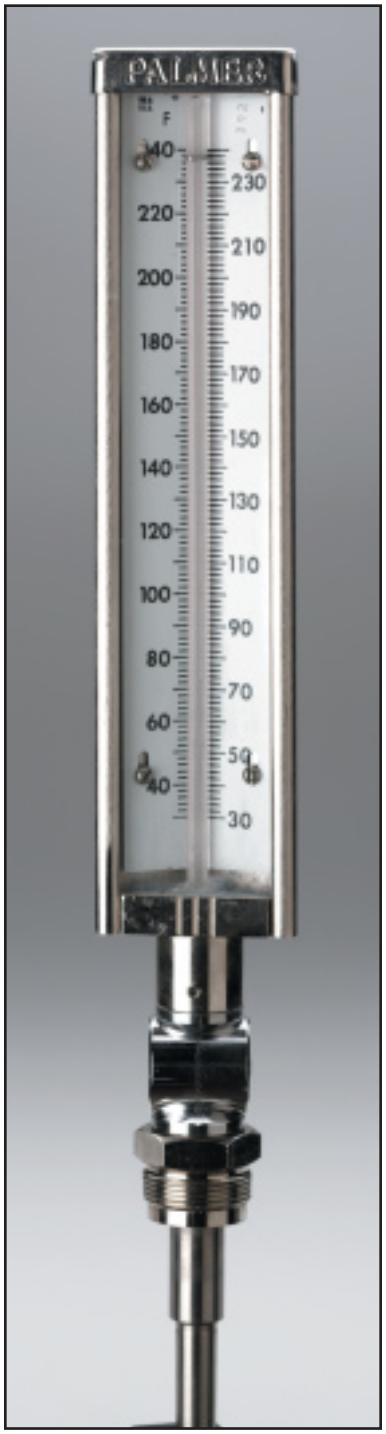

Model 3AA All Angle

Specifications		
	3AA	**2AA**
Case Length	9" (229mm)	12" (305mm)
Case Width	2.25" (57mm)	2.25" (57mm)
Case Material	Aluminum	Aluminum
Crystal	Instrument Glass	
Scales	Metal scales with black numerals & graduations on baked enamel finish	
Glass Tube	Red Reading lens glass thoroughly annealed & aged for permanent accuracy. Individually calibrated. Red Spirit Fill optional (up to 300˚F)	
Swivel Nut	1-1/4" -18 UNEF Brass*	1-1/4" -18 UNEF Brass*
Bulb Chamber	Stainless steel, tapered 0.437" (11mm)	Stainless steel, tapered 0.437" (11mm)
Accuracy	Within 1/2 scale division	

** Stainless Steel optional*

Stem Length Codes		
CODE	LENGTH	
	IN	MM
3.5	3.5"	89
6	6"	152
8	8"	203
12	12"	305

Standard Range Codes			
°F CODE	DIV	°C CODE	DIV
-30/130F	2°	**-35/55C**	1°
0/100F	2°	**-18/40C**	2°
30/180F	2°	**0/80C**	2°
30/240F	2°	**0/115C**	1°
30/300F	2°	**0/150C**	2°
50/400F	5°	**10/205C**	2°

Thermowells and Fittings

- For Tapered Bulbs (3AA) use 1140 Series Thermowells and Fittings

For a complete listing of Palmer Thermowells and Fittings, request Catalog PW1100.

Model 3AA • 2AA

All Angle Profile

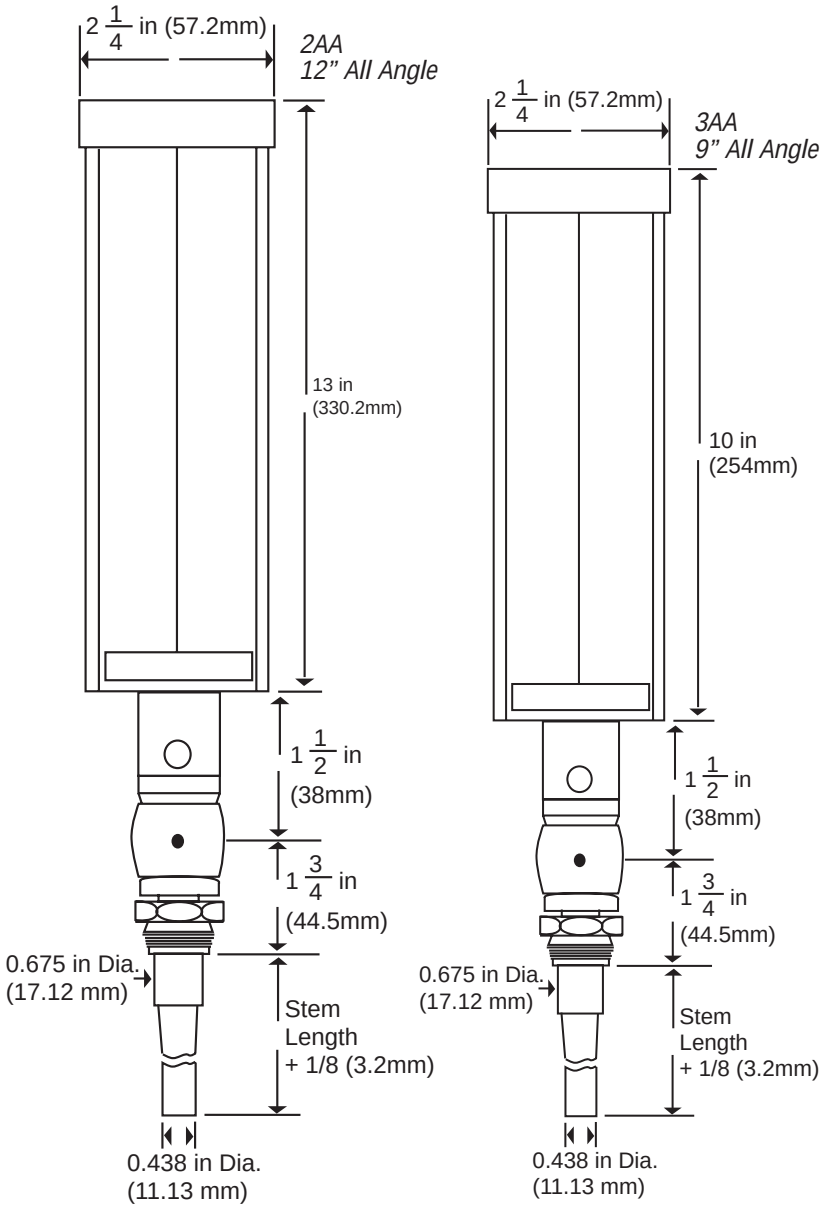

Ordering Information

To select a thermometer, please specify the following:

1.) Base Model Number:
- **3AA** 9" Case All Angle
- **2AA** 12" Case All Angle

2.) Add Stem Length Code from table on page 8.

3.) Add Temperature Range Code from table on page 8

4.) Specify any required options from the Option Code table at right.

Option Codes

Option	Code	9" (3AA)	12" (6AA)
Drain Holes	DH	✔	✔
Dual Scale	DS	✔	✔
Engraved Scale	ES	✔	Standard
One Piece Stem	OPS	✔	✔
Plastic Crystal	PC	✔	✔
Red Spirit Fill	RS	✔	✔
SS Swivel Nut	SN	✔	✔

✔ Available for this Model.

Sample Model Number	3AA	6	30/180F	ES
Sample Description	9" Case All Angle	6" Stem Length	30° to 180° F Range	Engraved Scale Option

Calibration Services Available

Multi-Sensing Industrial Thermometers

Palmer Multi-Sensing Industrial Thermometers easily integrate into computerized monitoring and control systems while retaining analog instrumentation reliability as an important backup reference. Multi-Sensing Industrial Thermometers also have the advantage of retrofitting electronic sensors into existing wells without additional electrical or mechanical connections. Now available with Wahl Thermocouple or RTD Sensors, matching Meters, Calibrators, and Accessories for a total Multi-Sensing Thermometer package.

- **Durable and Accurate:** Liquid-in-glass Industrial Thermometer with One or Two Electronic Temperature Sensors and Output connections.
- **9" or 12" Case Sizes:** Full selection of Case Angle styles.
- **Swivel Nut Connection:** 1/4" -18 UNEF Brass Swivel Nut Connection (Stainless Steel option).
- **Individually Calibrated:** Metal scales are individually calibrated to annealed and aged glass tubes for long term accuracy and reliability.
- **Maximum Metal to Metal Heat Transfer:** Tapered Bulb design for maximum metal to metal heat transfer with resulting accuracy and speed of response.
- **Sensors:** Available with One or Two RTD or Thermocouple Electronic Sensors
- **Select:** 2, 3, 4-Wire, 385 DIN Pt100 RTD, or Type J or K Thermocouple.
  Other Sensor types available on request.

*RTD Meter Connection (option **M**) on back of Industrial to Wahl 392M*

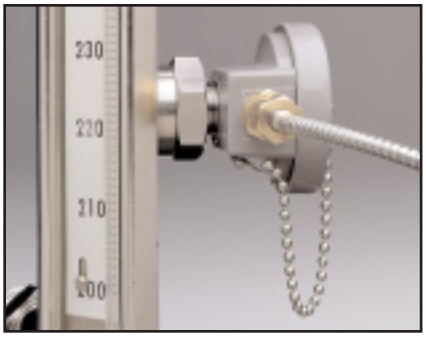

*Close-up of Terminal Block with 1/2" Conduit Connector (option **T**).*

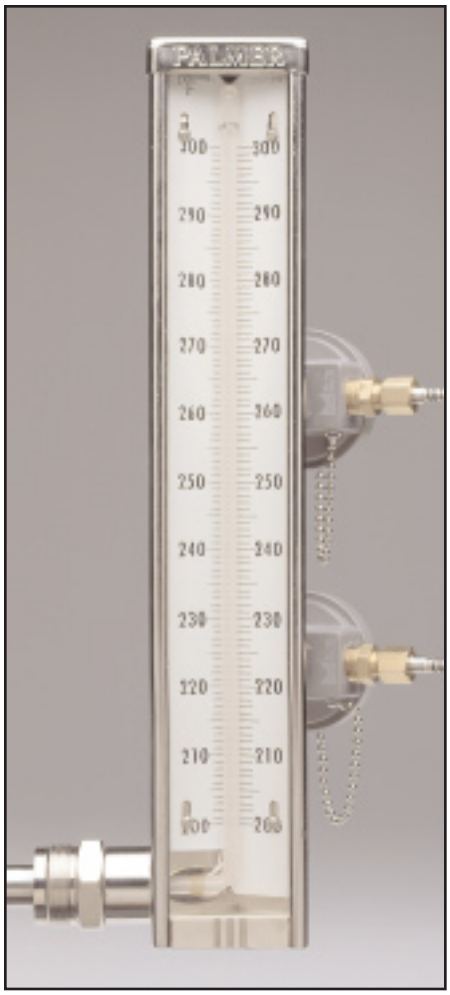

Terminal block with 1/2" diameter Conduit Connector. One or Two Electronic Sensor/Output Connections can be specified.

Wahl Meter Specifications

	RTD Meter		Type K Thermocouple Meters			
Model Numbers	**392EF (°F)** **392EC (°C)** **392ED (°F & °C)**	**392MF (°F)** **392MC (°C)** **392MD (°F & °C)**	**2500M (°F)** **1370M (°C)** N/A	**2500MVX (°F)** **1370MVX (°C)** N/A	**TM-410** **(°F & °C)**	**TM-500** **(°F & °C)**
Range	-290 to 1450°F -180 to 788°C	-60 to 752°F -51 to 400°C	-100 to 2500°F -70 to 1370°C	-100 to 2500°F -70 to 1370°C	-40 to 1999°F -40 to 1092°C	-328/2498°F -200/1370°C
Display Type	LED	LED	LED	LCD	LCD	LCD
Power Source	6.25V Rechg. battery pack	6.25V Rechg. battery pack	6.25V Rechg. battery pack	one 9V. battery	three AAA batteries	one 9V. battery
Resolution	0.1° from -290 to 375°F (190°C) Auto Ranges 1° above 375°F	0.1° to 375°F (190°C) Auto Ranges 1° above 375°F	1.0 °F or °C	1.0 °F or °C	0.1° at -40 to 199.9°F or °C 1.0° 200°F and above	0.1°, °F or °C
Input Connector	3 Conductor	3 Conductor	Standard Thermocouple Mini Connector			
Meter Accuracy at 77°F	±0.1°F/C ± one digit @ 32°F/°C	±0.1°F/C ± one digit @ 32°F/°C	±0.2% of reading ± one digit @ 77°F	±0.2% of reading ± one digit @ 77°F	±°F at 32 to 200°C ±0.5°C at 0 to 93°C	±0.5% of reading +1.4°F(0.7°C)@ 77°F
Features	Auto Range	Auto Range	Auto Zero	Auto Zero	Low Battery	Dual Input

Calibration Services Available

Multi-Sensing Industrial Thermometers

Options and Ordering Information

Base Model Number		
CASE STYLE	9" CODE	12" CODE
All Angle	3AA	2AA
Straight	309	209
90˚ Back	329	229
Left Side Angle	368L	268L
Right Side Angle	368R	268R
Incline Angle	349I	249I
Recline Angle	349R	249R

To select a Multi-Sensing Thermometer, specify the following from the tables below:

1) Base Model Number from table at left
2) Stem Length Code from table at left
3) Add Temperature Range Code from table below left
4) Select Sensor Code 1 and 2 (if applicable) from table below
5) Select Connection Code 1 and 2 (if applicable) from table below
6) Select Option Code from table below.

Sample Model Number

Case	Stem	Range	Sensor 1	Connection 1	Sensor 2	Connection 2	Options
309	3.5	0/240F	K	MC	R3	T	(DH)

**Use XX in part number if 2nd Sensor and Connection are not applicable.*

Stem Length Codes		
CODE	IN.	MM
2.25	2.25	57.2
3.5	3.5	89
3.75	3.75	95.3
4.75	4.75	120.7
6	6	152.4
8	8	203
9	9	229
12	12	305
18	18	457
24	24	610
30	30	762
36	36	914
42	42	1067
48	48	1219

Select Sensor 1 and Sensor 2	Code
Type J Thermocouple	J
Type K Thermocouple	K
Pt100-2 wire Thin Film RTD (385 DIN)	RT2
Pt100-3 wire Thin Film RTD (385 DIN)	RT3
Pt100-4 wire Thin Film RTD (385 DIN)	RT4
Other Sensors available upon request	

Standard Range Codes					
CODE	9" CASE	12" CASE	CODE	9" CASE	12" CASE
°F	DIV	DIV	°C	DIV	DIV
0/100F	1°	0.5°	-18/40C	1°	0.5°
0/100F&R	1°	0.5°	0/80C	1°	0.5°
-30/130F	2°	1°	0/115C	1°	1°
30/180F	2°	1°	0/150C	2°	1°
30/240F	2°	2°	10/205C	2°	2°
170/270F	1°	1°			
170/270F&P	1°	1°			
30/300F	2°	2°			
200/300F	1°	1°			
200/300F&P	1°	1°			
50/400F	5°	2°			
200/400F	2°	2°			

Select Connection 1 and Connection 2	Code
RTD Meter Connection to Wahl 392 M only	M
Terminal Block & 1/2" Conduit Connector for RTD or Thermocouple	T
Thermocouple Mini Connector	MC
Other Connections available upon request	

*Thermocouple Mini Connection (option **MC**) on back of Industrial Case to Wahl TM500*

Option Codes	
CODE	DESCRIPTION
DH	Drain Holes
ES	Engraved Scales
PC	Clear Plastic Crystal
RS	Red Spirit Fill*
SN	SS Swivel Nut

** Required for ranges beginning below -40°F/°C; maximum up to 300°F/150°C*

PALMER Wahl
INSTRUMENTATION GROUP

The World's Finest Manufacturers of
Temperature, Pressure, and Humidity Instrumentation

PALMER INSTRUMENTS, INC.

- Industrial Glass Thermometers
- Bimetal Dial Thermometers
- Pressure Gauges and Accessories
- Temperature and Pressure Recorders
- Liquid Filled Dial, Direct Drive Thermometer Systems
- Thermowells and Fittings
- ASTM and Laboratory Thermometers
- Process Thermometers
- Sanitary Thermometers and Gauges
- Thermometer Contract Manufacturing

Wahl INSTRUMENTS, INC.

- Heat Prober® Meter/Probe Thermometer Systems
- Heat Spy® Hand-Held Infrared Thermometers
- Digi-Stem® Digital Industrial Thermometers
- Temperature Transmitters and Switches
- Temp-Plate® Irreversible and Reversible Temperature Labels
- Heat Spy Monitor® Fixed Infrared Sensors
- In situ RTD and Thermocouple Probes and Connection Systems
- Thermistor Probes and Connection Systems
- Specialty Probes for OEM applications
- Probe Extension Cables and Connectors

AOIP

- Portable Electronic Temperature and Process Calibrators
- Bench Top Electronic Temperature and Process Calibrators
- Bench Top Precision Thermometers

Lufft

- Dataloggers for Temperature, Humidity, Barometric Pressure, CO2 and Meterorological Conditions
- Modular Data Logger for Measuring, Logging & Control
- Hand-Held RTD, Dual Thermocouple, and Combination Thermocouple and RTD Meters
- Hand-Held Pressure and Differential Pressure Meters, Temperature, Humidity, and Dew Point Meters
- Electronic Weather Stations

Instrumentation Group Warranty

Manufacturer warrants all products listed in this catalog to be free from defects in material or workmanship under normal use and service. The Manufacturer agrees to repair or replace any product which upon examination is revealed to have been defective due to faulty workmanship or material if returned to our factory, transportation charges prepaid, within the product specific warranty period stated in the catalog by the manufacturer. This warranty is in lieu of all other warranties, expressed or implied and of all obligations or liabilities on its part for damages including but not limited to consequential damages, following the use or misuse of instruments sold by the Manufacturer. No agent is authorized to assume for Manufacturer any liability except as set forth above.

234 Old Weaverville Road • Asheville, North Carolina • 28804-1228
Phone (800) 421-2853 • (828) 658-3131 • Fax (828) 658-0728 • Email: info@palmerwahl.com
www.palmerwahl.com

PW1150

05/04 Pdf revised 10/18/06