PALMER Wahl
INSTRUMENTATION GROUP

WahlX • RT ®
-200 to + 600 deg C

WahlX • TC ®
-200 to + 1350 deg C

STOCK IT

RE-WORKABLE MINERAL INSULATED PROBES

RTD

TC

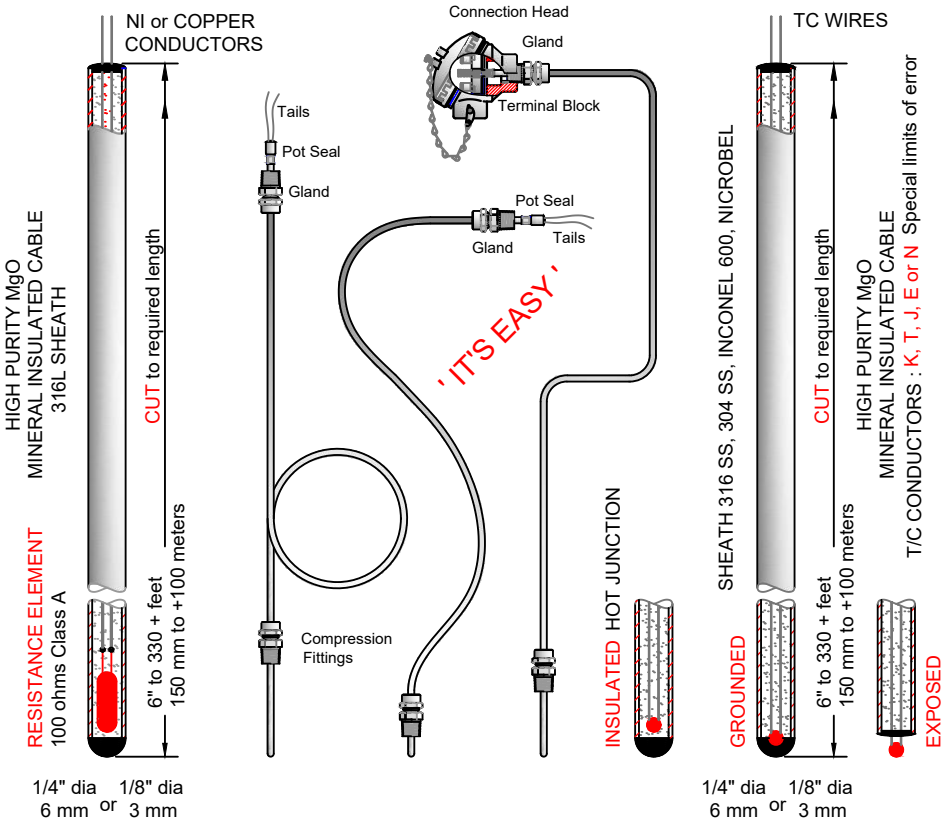

STOCK LENGTHS

12"	18"	24"	36"
305 mm	450 mm	610 mm	715 mm

SELECTION OF ENGINEERED INDUSTRIAL TEMPERATURE SENSORS

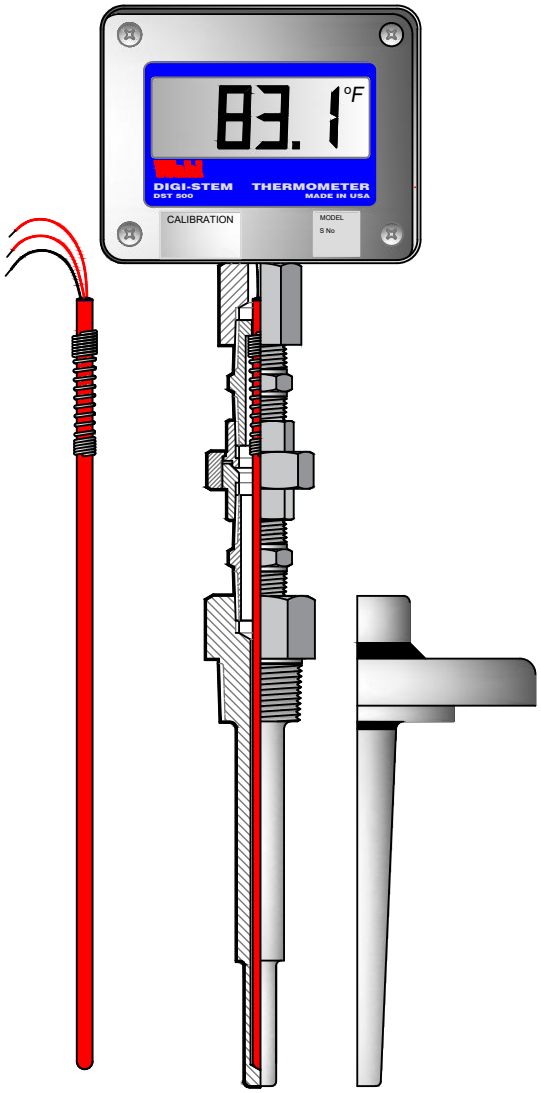

DESIGNERS, MANUFACTURERS and SUPPLIERS OF -

- Mineral Insulated Thermocouples
- Mineral Insulated RTD's
- 4-20 mA Head Mounted Transmitters
- Solid Drilled Thermowells
- Fabricated Thermowells
- Resistance Thermometer Assemblies
- Multi-Point Assemblies
- Tube Skin Thermocouples
- Bi-Metals
- Rigid & Remote Reading Thermometers
- Transmitters with Integral Indicators

COMPONENTS for PRODUCTION of TEMPERATURE PRODUCTS

- Mineral Insulated Metal Sheathed Thermocouple Cable
- Mineral Insulated Metal Sheathed Cables with Nickel & Copper Conductors for Resistance Thermometers
- T/C Compensating & Extension Cables
- Connection Heads
- Terminal Blocks
- Pressure Entry & Cable Glands
- Plugs & Sockets & Panels

PALMER WAHL QUALITY ASSURANCE INCLUDES

- ISO 9001 : 2008 Certified
- NIST Traceable Calibration
- USD Approved
- ATEX & FM Approvals
- Material Certification
- Full QA Manuals
- Pressure Testing
- Radiography
- Ultrasonics
- Nace Certification
- Hardness Testing
- Heat Treatment
- Welders Qualifications
- Thermowell Stress Calculations

PALMER Wahl
INSTRUMENTATION GROUP

America's First Manufacturer of Precision Industrial Temperature and Pressure Instrumentation

REVISIONS			
REV	DESCRIPTION	DATE	CHANGED BY

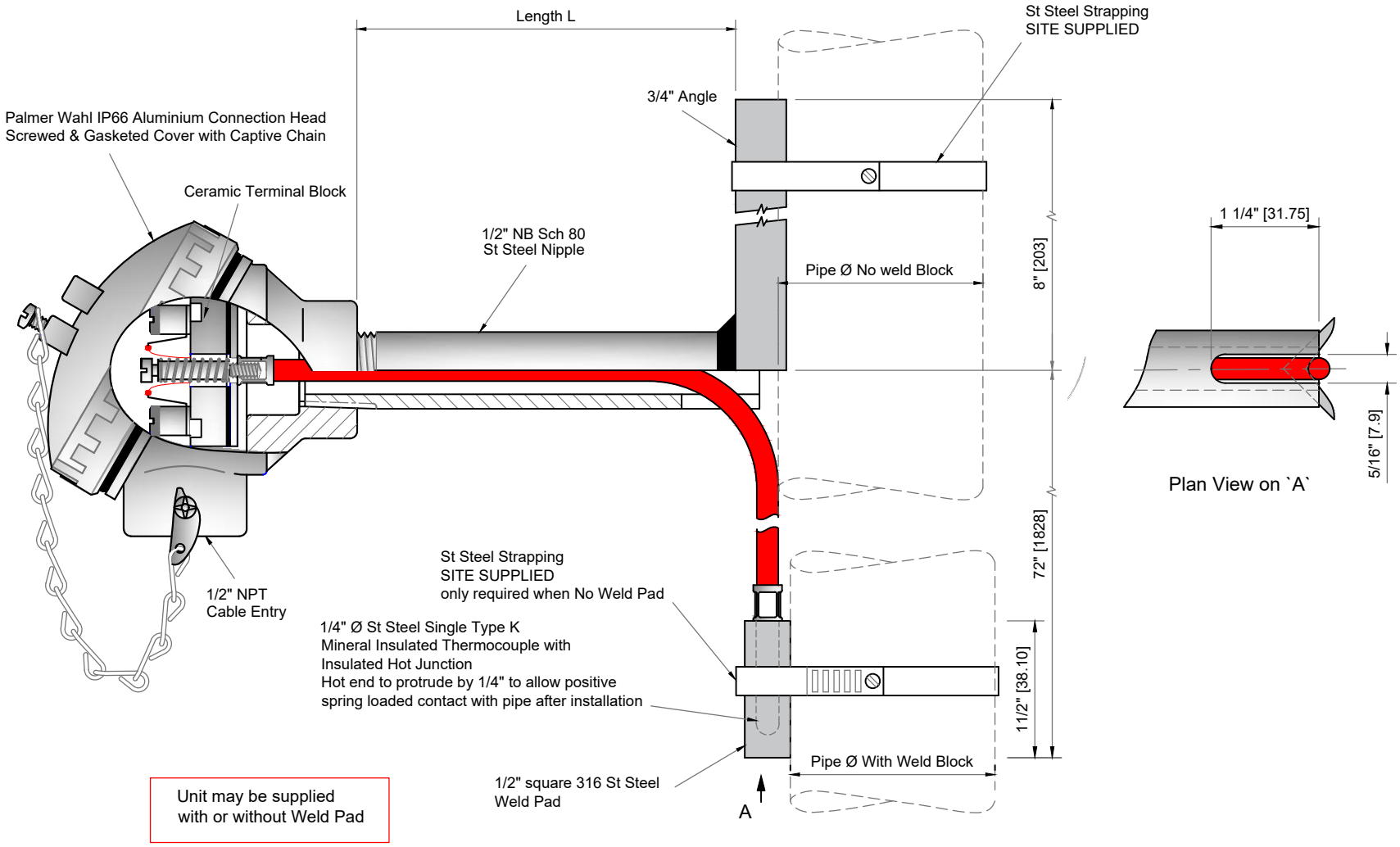

DIMENSIONS IN MM UNLESS OTHERWISE STATED. TOLERANCES – Full Millimeters +/– 0.5mm One Decimal Place +/– 0.15mm Two Decimal Places +/– 0.025mm	CONTRACT NO.		Wahl Instruments, Inc. 234 Old Weaverville Road Asheville, NC 28804
	APPROVALS	DATE	Pipe Surface Temperature Thermocouple Assembly
MATERIAL	DRAWN Lynn Blount	5.18.16	
	CHECKED MJB	5.18.16	SIZE / CAGE CODE / DRAWING NO. PW-1034 / REV
FINISH	ISSUED		
DO NOT SCALE DRAWING			SCALE / SHEET OF

REVISIONS			
REV	DESCRIPTION	DATE	CHANGED BY

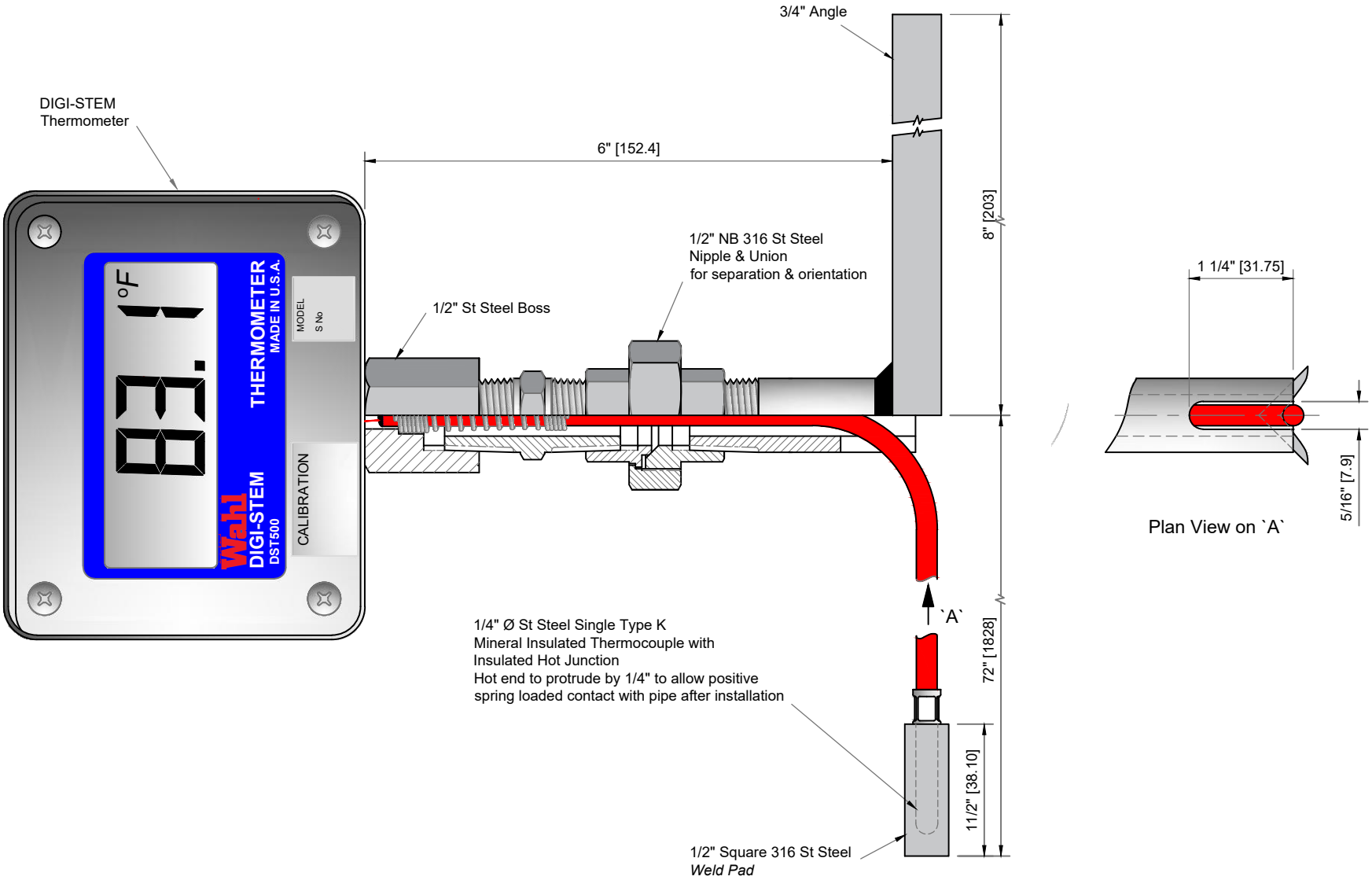

DIMENSIONS IN MM UNLESS OTHERWISE STATED. TOLERANCES – Full Millimeters +/– 0.5mm One Decimal Place +/– 0.15mm Two Decimal Places +/– 0.025mm	CONTRACT NO.		Wahl Instruments, Inc. 234 Old Weaverville Road Asheville, NC 28804
	APPROVALS	DATE	Digi-Stem Weld Block Pipe Surface Thermocouple Assembly
MATERIAL	DRAWN Lynn Blount	5.18.16	
	CHECKED MJB	5.18.16	SIZE / CAGE CODE / DRAWING NO. PW-1033 / REV
FINISH	ISSUED		
DO NOT SCALE DRAWING			SCALE / SHEET OF

REVISIONS			
REV	DESCRIPTION	DATE	CHANGED BY

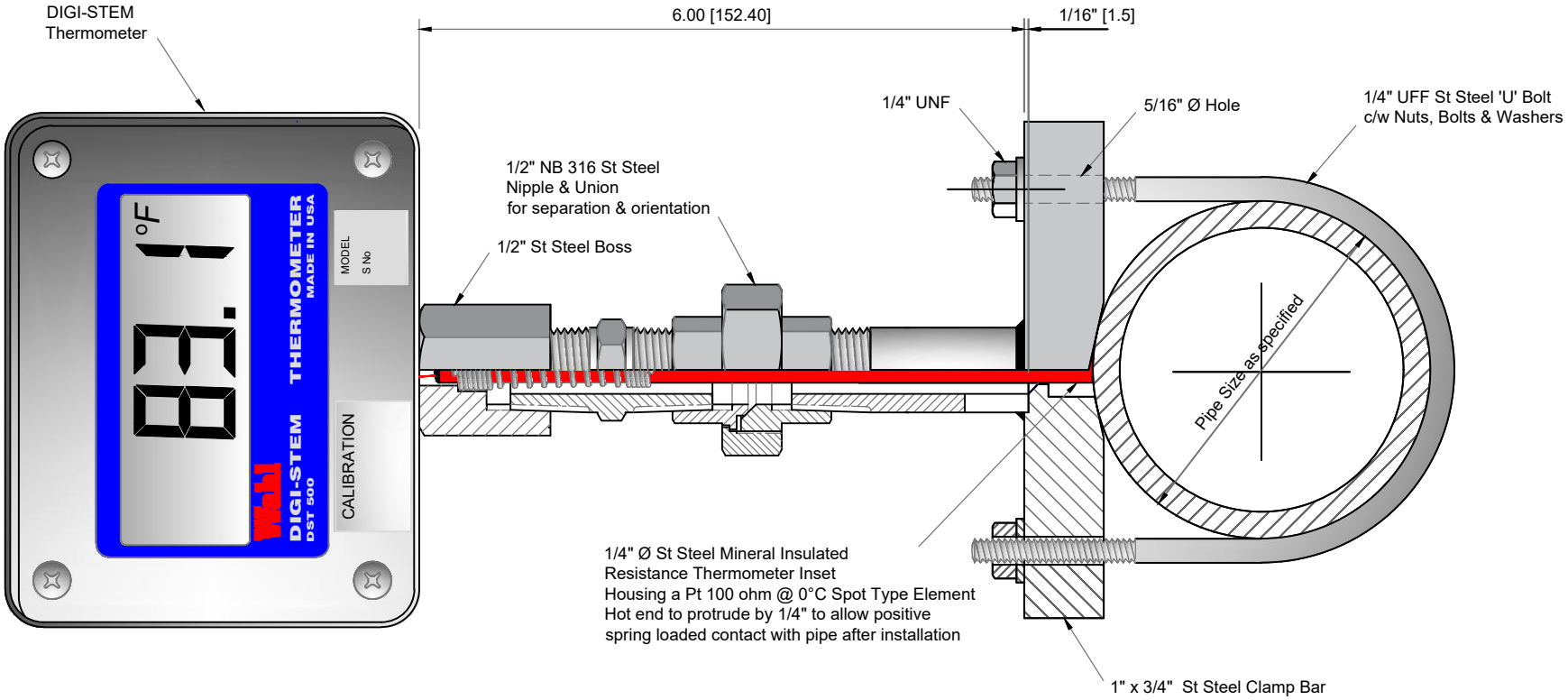

DIMENSIONS IN MM UNLESS OTHERWISE STATED. TOLERANCES – Full Millimeters +/– 0.5mm One Decimal Place +/– 0.15mm Two Decimal Places +/– 0.025mm	CONTRACT NO.		Wahl Instruments, Inc. 234 Old Weaverville Road Asheville, NC 28804
	APPROVALS	DATE	Pipe Surface Temperature Resistance Thermometer Assembly
MATERIAL	DRAWN Lynn Blount	5.16.16	
	CHECKED MJB	5.16.16	SIZE / CAGE CODE / DRAWING NO. PW-1030 / REV
FINISH	ISSUED		
DO NOT SCALE DRAWING			SCALE / SHEET OF

REVISIONS				
REV	DESCRIPTION	DATE	CHANGED BY	
A	Bend Added	4.27.16	L.B.	M.J.B.

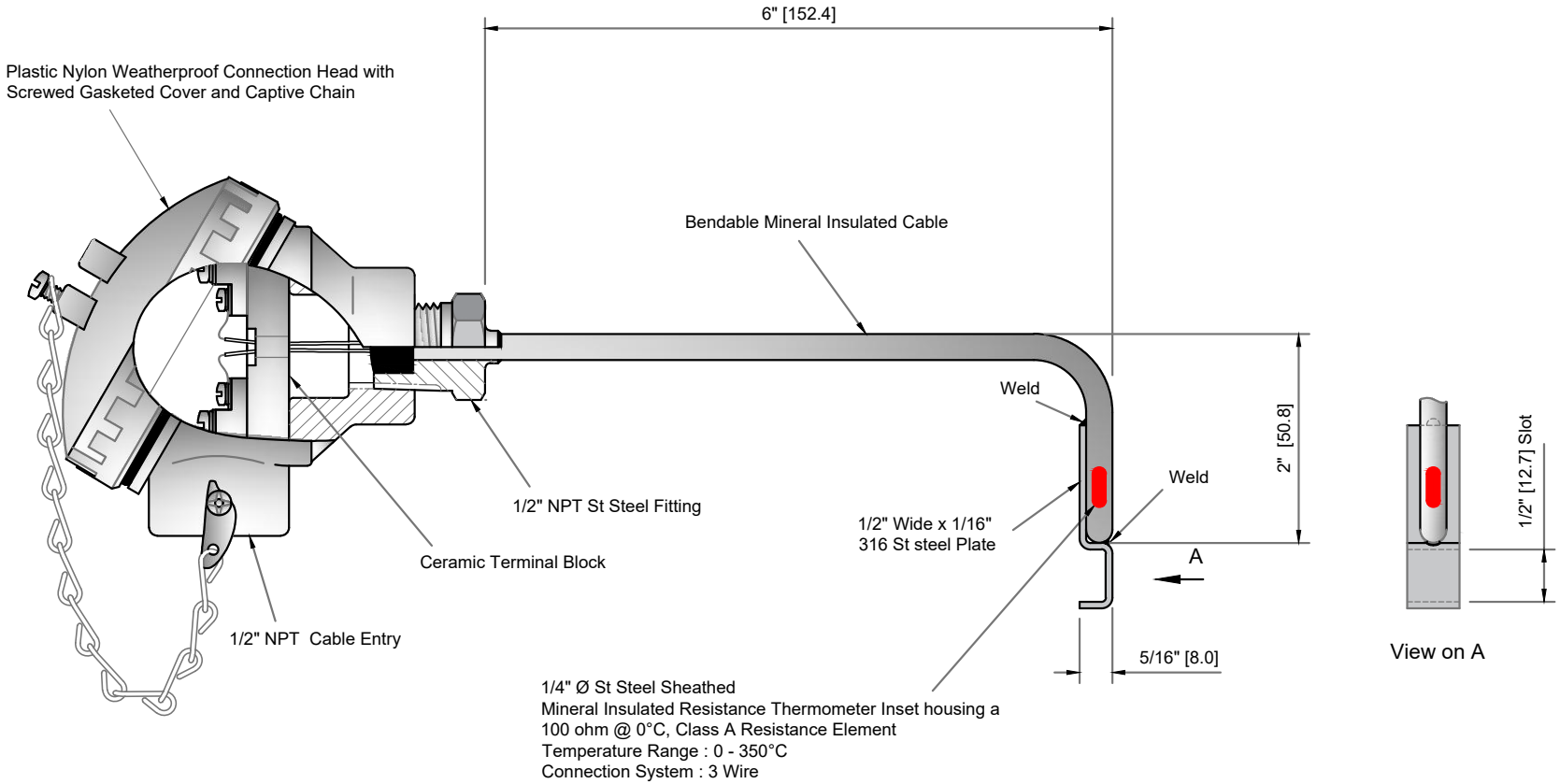

DIMENSIONS IN MM UNLESS OTHERWISE STATED. TOLERANCES – Full Millimeters +/– 0.5mm One Decimal Place +/– 0.15mm Two Decimal Places +/– 0.025mm	CONTRACT NO.		Wahl Instruments, Inc. 234 Old Weaverville Road Asheville, NC 28804
	APPROVALS	DATE	Resistance Thermometer Assembly Formed - Slotted Weld Pad
MATERIAL	DRAWN Lynn Blount	4.26.16	
	CHECKED MJB	4.26.16	
FINISH	ISSUED		SIZE / CAGE CODE / DRAWING NO. PW-1026 / REV A
DO NOT SCALE DRAWING			SCALE / SHEET OF

REVISIONS			
REV	DESCRIPTION	DATE	CHANGED BY

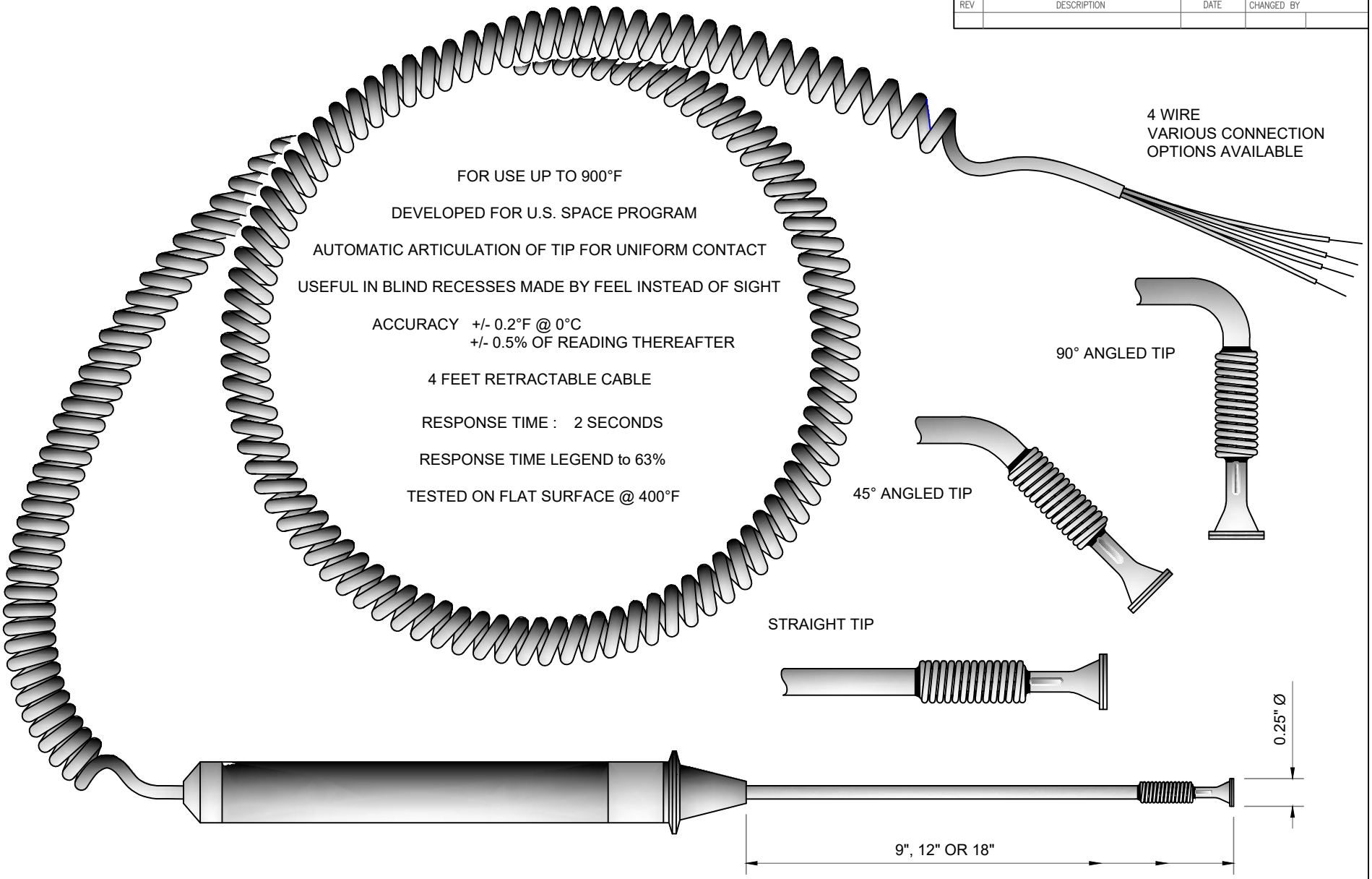

SENSOR : Pt 100 ohm @ 0°C
CONNECTION SYSTEM : 4 WIRE

DIMENSIONS IN MM UNLESS OTHERWISE STATED. TOLERANCES – Full Millimeters +/– 0.5mm One Decimal Place +/– 0.15mm Two Decimal Places +/– 0.025mm	CONTRACT NO.		Wahl Instruments, Inc. 234 Old Weaverville Road Asheville, NC 28804
	APPROVALS	DATE	Articulated Surface Probe
MATERIAL	DRAWN Lynn Blount	3.24.16	
	CHECKED MJB	3.24.16	SIZE / CAGE CODE / DRAWING NO. PW-1012 / REV
FINISH	ISSUED		
DO NOT SCALE DRAWING			SCALE / SHEET OF

REVISIONS			
REV	DESCRIPTION	DATE	CHANGED BY

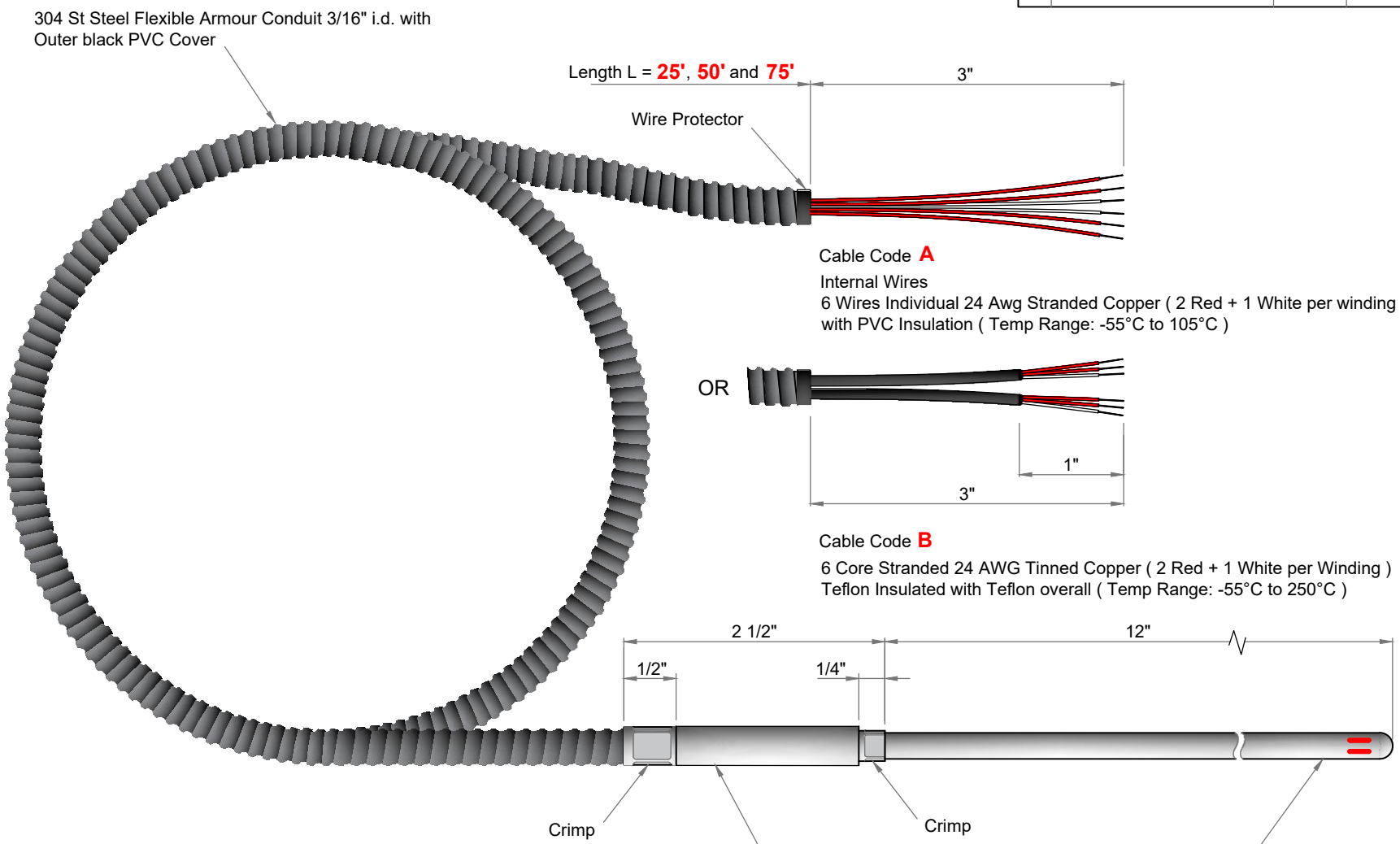

To Order Specify : **PW-1074** / **25** , **50** or **75** feet / Cable Code **A** or **B**

DIMENSIONS IN MM UNLESS OTHERWISE STATED. TOLERANCES – Full Millimeters +/– 0.5mm One Decimal Place +/– 0.15mm Two Decimal Places +/– 0.025mm	CONTRACT NO.	Wahl	Wahl Instruments, Inc. 234 Old Weaverville Road Asheville, NC 28804
	APPROVALS / DATE		Duplex Resistance Thermometer Assembly
MATERIAL	DRAWN Lynn Blount 11.9.16		
	CHECKED MJB 11.9.16	SIZE / CAGE CODE	DRAWING NO. PW-1074 / REV
FINISH	ISSUED		
DO NOT SCALE DRAWING		SCALE	SHEET OF

REVISIONS			
REV	DESCRIPTION	DATE	CHANGED BY

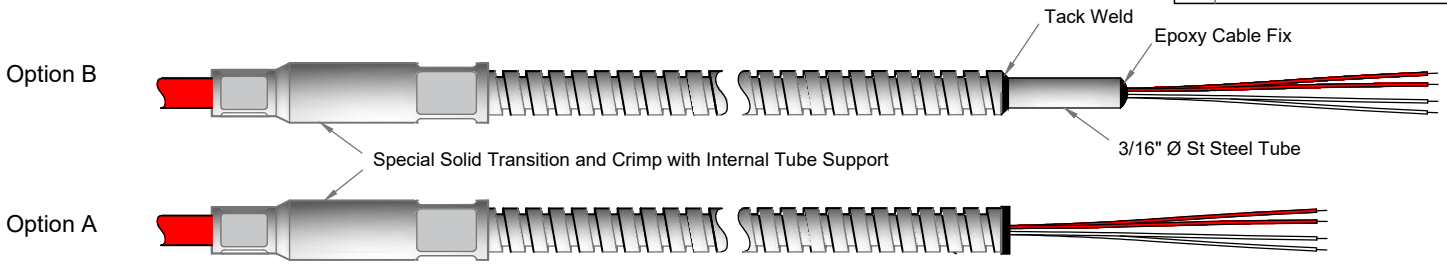

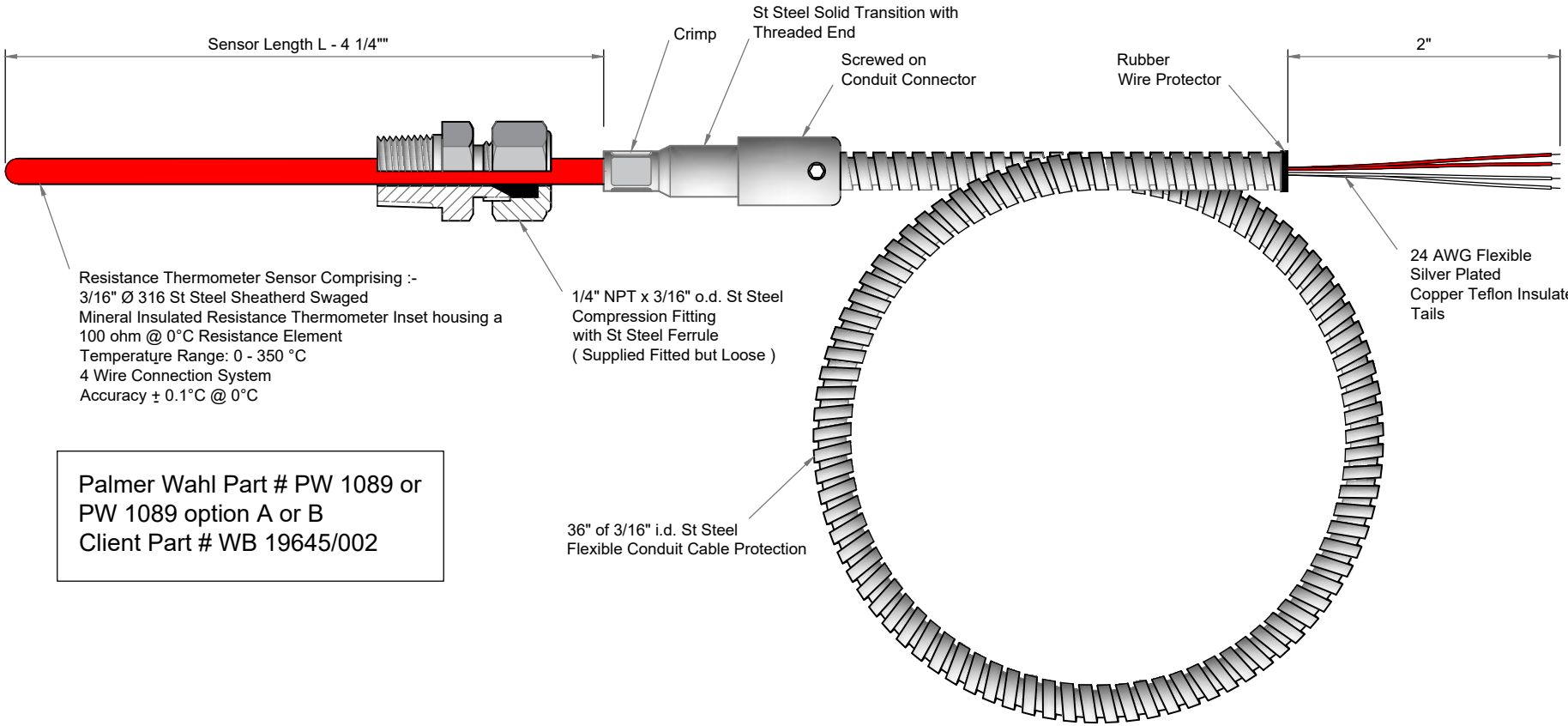

Palmer Wahl Part # PW 1089 or
PW 1089 option A or B
Client Part # WB 19645/002

DIMENSIONS IN MM UNLESS OTHERWISE STATED. TOLERANCES – Full Millimeters +/– 0.5mm One Decimal Place +/– 0.15mm Two Decimal Places +/– 0.025mm	CONTRACT NO.		Wahl Instruments, Inc. 234 Old Weaverville Road Asheville, NC 28804
	APPROVALS	DATE	Resistance Thermometer Sensor 36" St Steel Conduit Cable
MATERIAL	DRAWN Lynn Blount	12.7.16	
	CHECKED MJB	12.7.16	SIZE / CAGE CODE / DRAWING NO. PW-1089 / REV
FINISH	ISSUED		
DO NOT SCALE DRAWING			SCALE / SHEET OF

REVISIONS			
REV	DESCRIPTION	DATE	CHANGED BY

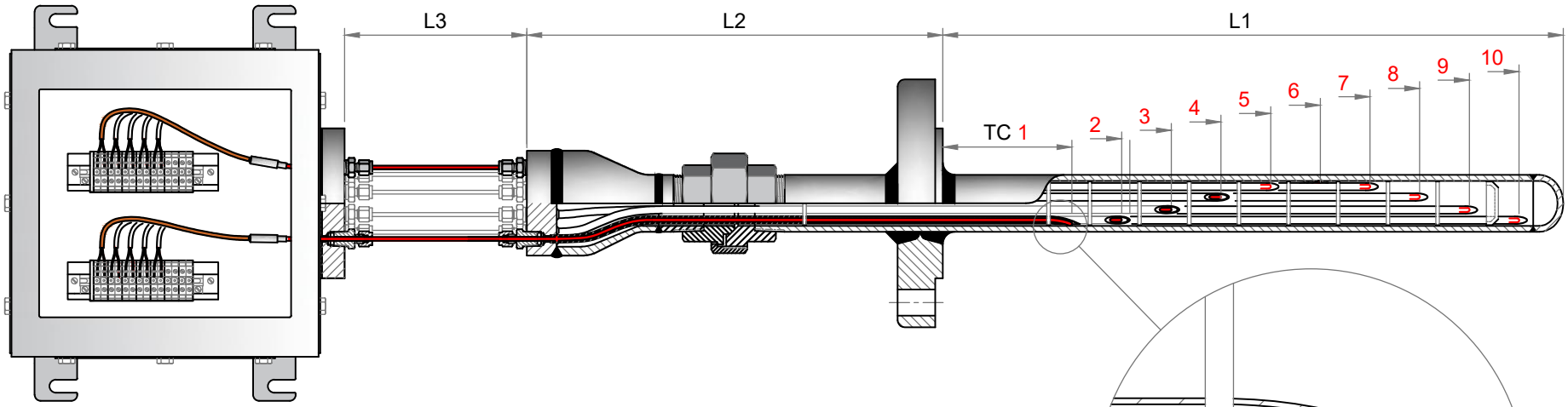

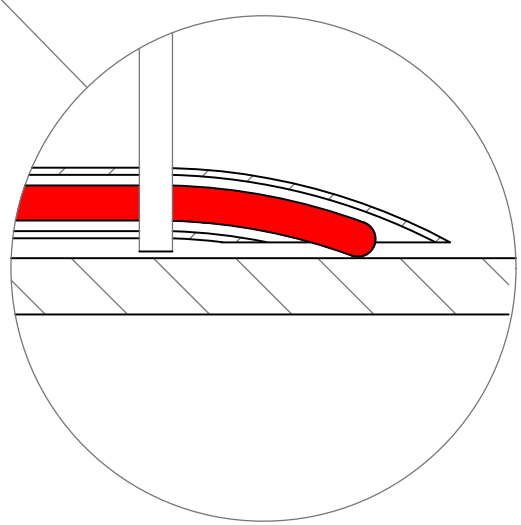

ENLARGED VIEW
Thermocouple Tip

- UP TO 20 POINTS AVAILABLE
- INDIVIDUAL INTERCHANGEABLE THERMOCOUPLES DURING PLANT OPERATION
- UNION ORIENTATION FOR TOTAL TUBE BUNDLE ASSEMBLY REMOVEL
- SAFETY SEAL CHAMBER
- FLEXIBLE EXTENSION TO JUNCTION BOX WITH CONTINUOUS MINERAL INSULATED THERMOCOUPLE
- 1/8" OR 3mm Ø THERMOCOUPLES
- THERMOCOUPLE TIP TOUCHES INSIDE WALL OF THERMOWELL
- VARIABLE MECHCANICAL THERMOWELL SIZES,MATERIALS & MOUNTING
- LENGTHS UP TO 10 meters

DIMENSIONS IN MM UNLESS OTHERWISE STATED. TOLERANCES – Full Millimeters +/– 0.5mm One Decimal Place +/– 0.15mm Two Decimal Places +/– 0.025mm	CONTRACT NO.		Wahl Instruments, Inc. 234 Old Weaverville Road Asheville, NC 28804
	APPROVALS	DATE	Multipoint Thermocouple Assembly
MATERIAL	DRAWN Lynn Blount	10.28.16	Guide Tube Type - Flexible Extension
	CHECKED MJB	10.28.16	SIZE / CAGE CODE / DRAWING NO. PW-1081 / REV
FINISH	ISSUED		
DO NOT SCALE DRAWING			SCALE / SHEET OF

REVISIONS			
REV	DESCRIPTION	DATE	CHANGED BY

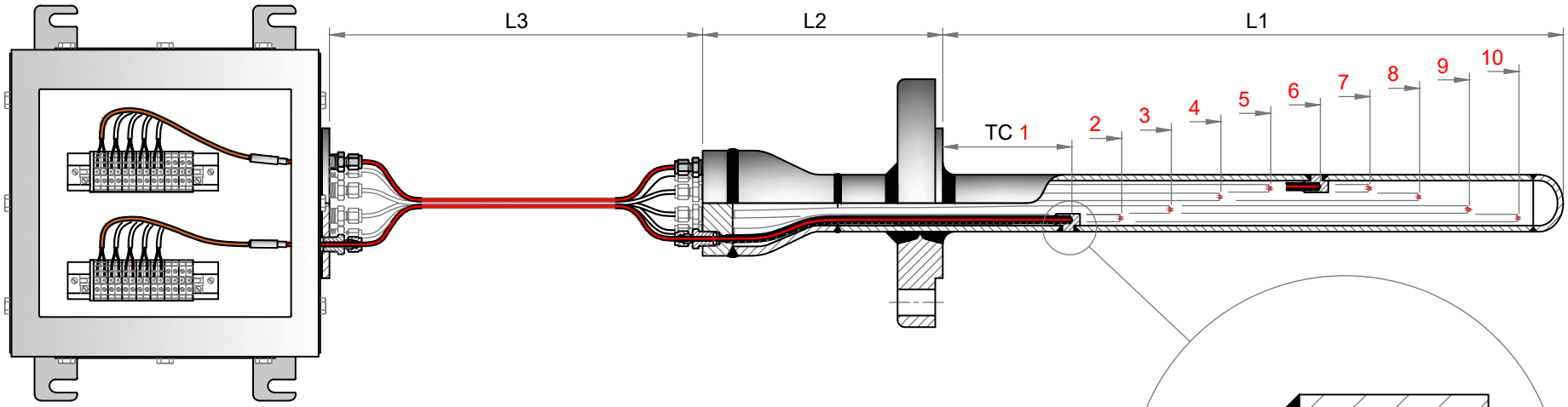

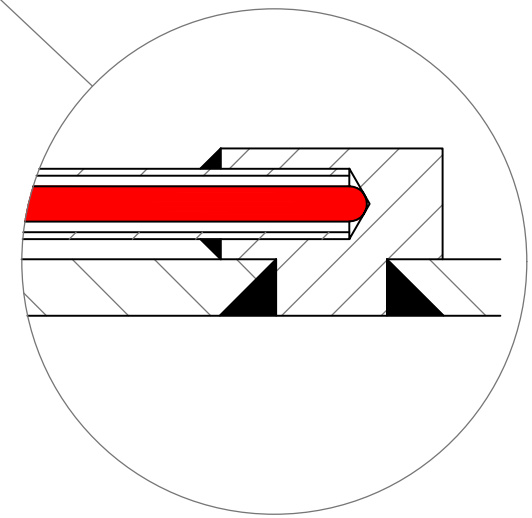

ENLARGED VIEW
Thermocouple Tip

- UP TO 20 POINTS AVAILABLE
- INDIVIDUAL INTERCHANGEABLE THERMOCOUPLES DURING PLANT OPERATION
- SAFETY SEAL CHAMBER
- FLEXIBLE EXTENSION TO JUNCTION BOX WITH CONTINUOUS MINERAL INSULATED THERMOCOUPLE
- 1/8" OR 3mm Ø THERMOCOUPLES
- THERMOCOUPLE TOUCHES BOTTOM OF SIDE WALL WELD BLOCK FOR GUARANTEED THERMAL CONTACT & FAST RESPONSE
- VARIABLE MECHCANICAL THERMOWELL SIZES, MATERIALS & MOUNTING
- LENGTHS UP TO 10 meters
- ALSO AVAILABLE WITH FAST RESPONSE MINERAL INSULATED RESISTANCE THERMOMETER PROBES FOR HIGHER ACCURACY

DIMENSIONS IN MM UNLESS OTHERWISE STATED. TOLERANCES – Full Millimeters +/– 0.5mm One Decimal Place +/– 0.15mm Two Decimal Places +/– 0.025mm	CONTRACT NO.		Wahl Instruments, Inc. 234 Old Weaverville Road Asheville, NC 28804
	APPROVALS	DATE	Multipoint Thermocouple Assembly
MATERIAL	DRAWN Lynn Blount	10.28.16	Fixed Guide Tube Type - Flexible Extension
	CHECKED MJB	10.28.16	SIZE / CAGE CODE / DRAWING NO. PW-1082 / REV
FINISH	ISSUED		
DO NOT SCALE DRAWING			SCALE / SHEET OF

REVISIONS			
REV	DESCRIPTION	DATE	CHANGED BY

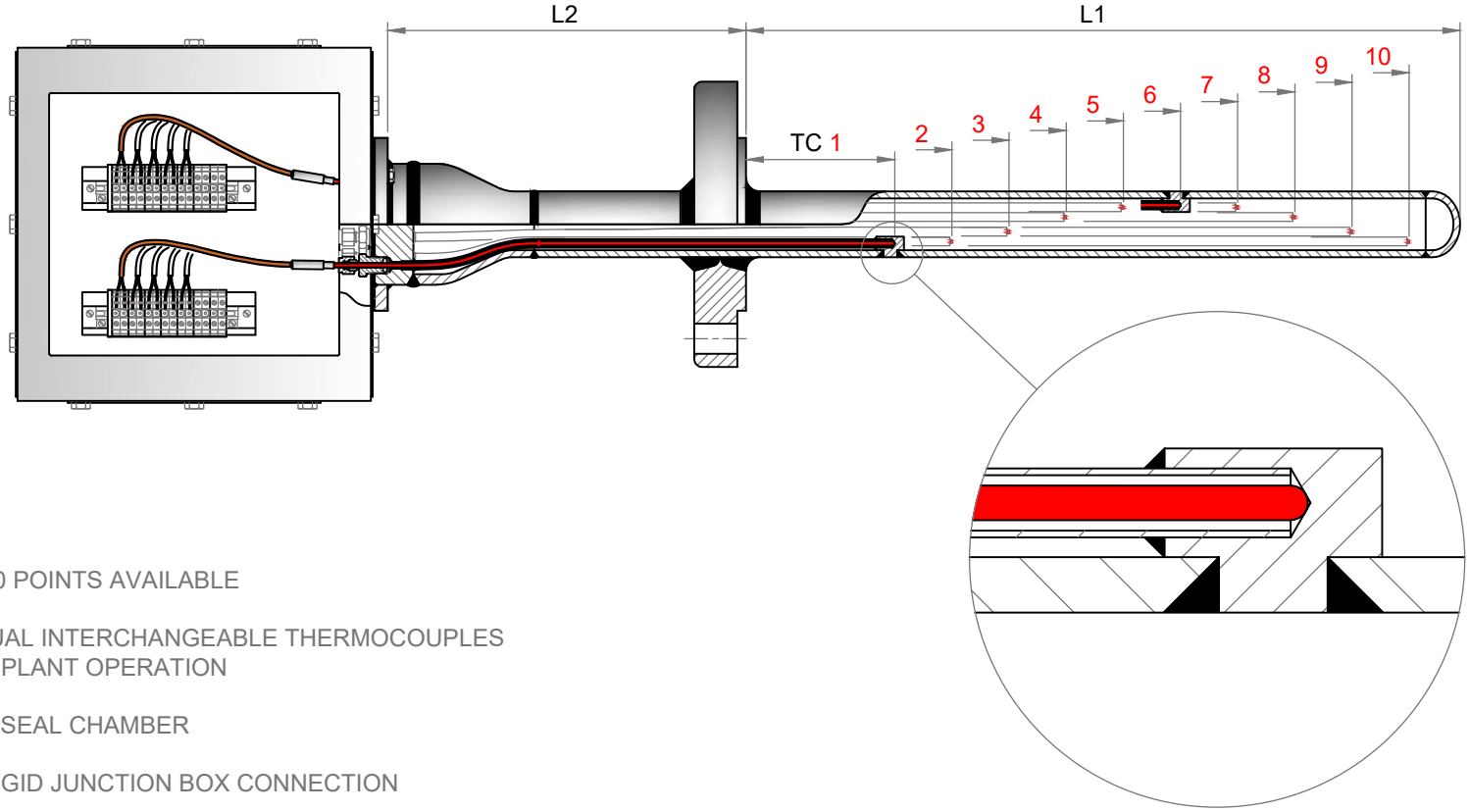

ENLARGED VIEW
Thermocouple Tip

- UP TO 20 POINTS AVAILABLE
- INDIVIDUAL INTERCHANGEABLE THERMOCOUPLES DURING PLANT OPERATION
- SAFETY SEAL CHAMBER
- FIXED RIGID JUNCTION BOX CONNECTION
- 1/8" OR 3mm Ø THERMOCOUPLES
- THERMOCOUPLE TOUCHES BOTTOM OF SIDE WALL WELD BLOCK FOR GUARANTEED THERMAL CONTACT & FAST RESPONSE
- VARIABLE MECHCANICAL THERMOWELL SIZES, MATERIALS & MOUNTING
- LENGTHS UP TO 10 meters
- ALSO AVAILABLE WITH FAST RESPONSE MINERAL INSULATED RESISTANCE THERMOMETER PROBES FOR HIGHER ACCURACY

DIMENSIONS IN MM UNLESS OTHERWISE STATED. TOLERANCES – Full Millimeters +/– 0.5mm One Decimal Place +/– 0.15mm Two Decimal Places +/– 0.025mm	CONTRACT NO.	Wahl	Wahl Instruments, Inc. 234 Old Weaverville Road Asheville, NC 28804
	APPROVALS / DATE		Multipoint Thermocouple Assembly
MATERIAL	DRAWN Lynn Blount 10.28.16		Fixed Guide Tube Type - Rigid Connection
	CHECKED MJB 10.28.16	SIZE / CAGE CODE	DRAWING NO. PW-1083 / REV
FINISH	ISSUED		
DO NOT SCALE DRAWING		SCALE	SHEET OF

REVISIONS			
REV	DESCRIPTION	DATE	CHANGED BY

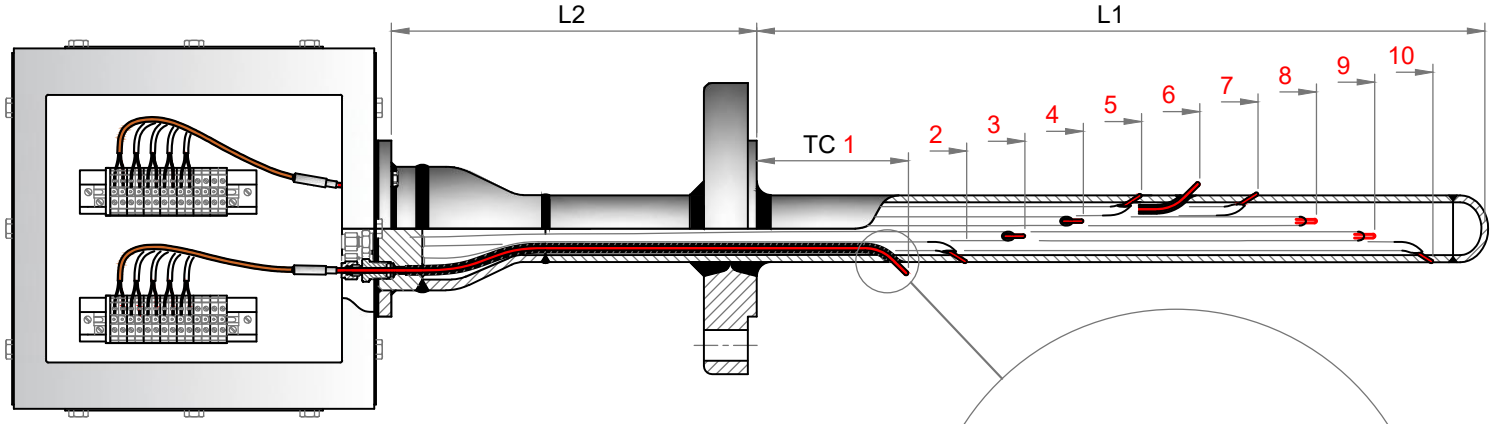

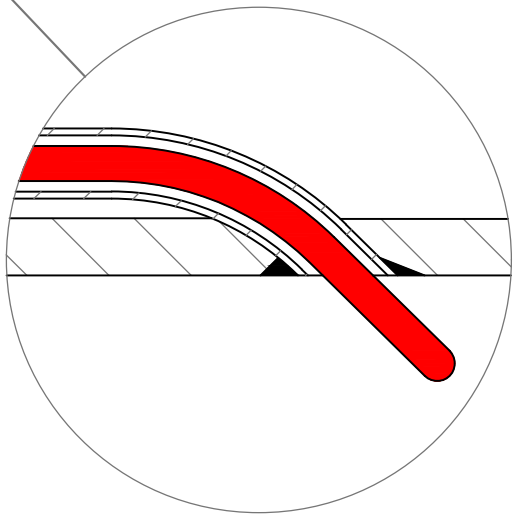

ENLARGED VIEW
Thermocouple Tip

- UP TO 20 POINTS AVAILABLE
- INDIVIDUAL INTERCHANGEABLE THERMOCOUPLES DURING PLANT SHUTDOWN ONLY
- SAFETY SEAL CHAMBER
- 1/8" OR 3mm Ø MINERAL INSULATED THERMOCOUPLE
- THERMOCOUPLE PROTRUDES INTO PRODUCT FOR FASTEST POSSIBLE RESPONSE
- VARIABLE MECHCANICAL THERMOWELL SIZES, MATERIALS & MOUNTING
- LENGTHS UP TO 10 meters

DIMENSIONS IN MM UNLESS OTHERWISE STATED. TOLERANCES – Full Millimeters +/– 0.5mm One Decimal Place +/– 0.15mm Two Decimal Places +/– 0.025mm	CONTRACT NO.		Wahl Instruments, Inc. 234 Old Weaverville Road Asheville, NC 28804
	APPROVALS	DATE	Fast Response Multipoint T/C Assembly
MATERIAL	DRAWN Lynn Blount	10.28.16	Guide Tube Type - T/C Protrudes into Product
	CHECKED MJB	10.28.16	SIZE / CAGE CODE / DRAWING NO. PW-1084 / REV
FINISH	ISSUED		
DO NOT SCALE DRAWING			SCALE / SHEET OF

REVISIONS			
REV	DESCRIPTION	DATE	CHANGED BY

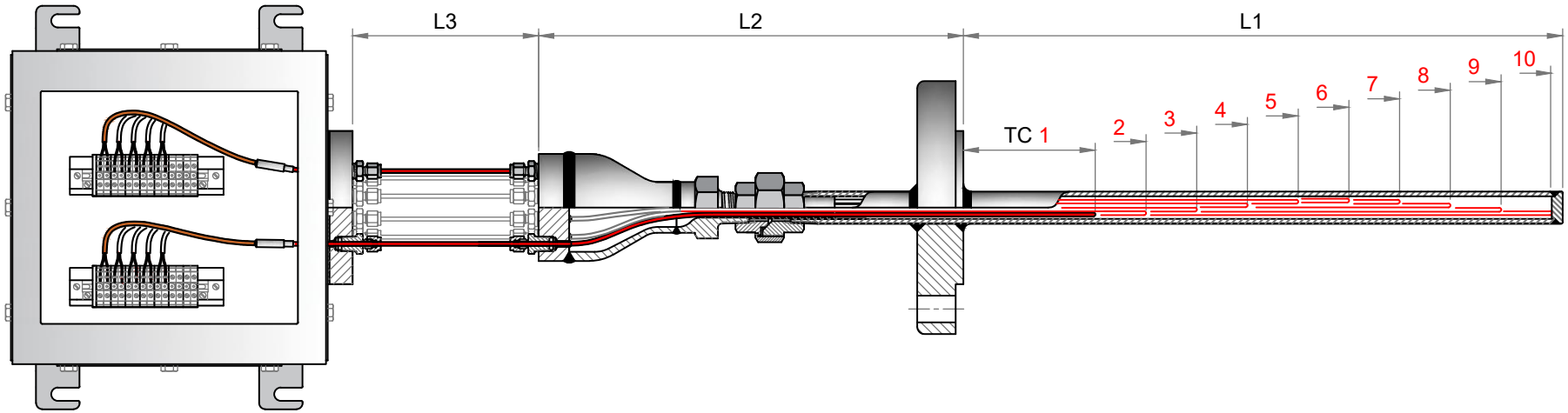

- UP TO 20 POINTS AVAILABLE
- INDIVIDUAL INTERCHANGEABLE THERMOCOUPLES DURING PLANT SHUTDOWN ONLY
- UNION FOR TOTAL THERMOCOUPLE BUNDLE REMOVAL & ORIENTATION
- SAFETY SEAL CHAMBER
- FLEXIBLE EXTENSION TO JUNCTION BOX WITH CONTINUOUS MINERAL INSULATED THERMOCOUPLE
- 1/8" OR 3mm Ø THERMOCOUPLES
- THERMOCOUPLE SIDE TOUCHES INSIDE WALL OF THERMOWELL
- VARIABLE MECHCANICAL THERMOWELL SIZES, MATERIALS & MOUNTING

- CONSIDERATION TO UTILIZE A GENERALLY SMALLER THERMOWELL WITH INSIDE DIAMETER TO SUIT THERMOCOUPLE BUNDLE OUTSIDE DIAMETER
- WHERE THERMAL RESPONSE TIME NOT CRITICAL, RESISTANCE THERMOMETERS MAY BE FITTED
- DUMMY THERMOCOUPLE CABLES MAY BE PROVIDED FROM HOT JUNCTION TO THERMOWELL TIP TO ASSIST CENTRALISATION
- LENGTHS UP TO 10 meters

DIMENSIONS IN MM UNLESS OTHERWISE STATED. TOLERANCES – Full Millimeters +/– 0.5mm One Decimal Place +/– 0.15mm Two Decimal Places +/– 0.025mm	CONTRACT NO.		Wahl Instruments, Inc. 234 Old Weaverville Road Asheville, NC 28804
	APPROVALS	DATE	Multipoint Thermocouple Assembly
MATERIAL	DRAWN Lynn Blount	10.28.16	BundleType - Flexible Extension
	CHECKED MJB	10.28.16	SIZE / CAGE CODE / DRAWING NO. PW-1085 / REV
FINISH	ISSUED		
DO NOT SCALE DRAWING			SCALE / SHEET OF

REVISIONS			
REV	DESCRIPTION	DATE	CHANGED BY

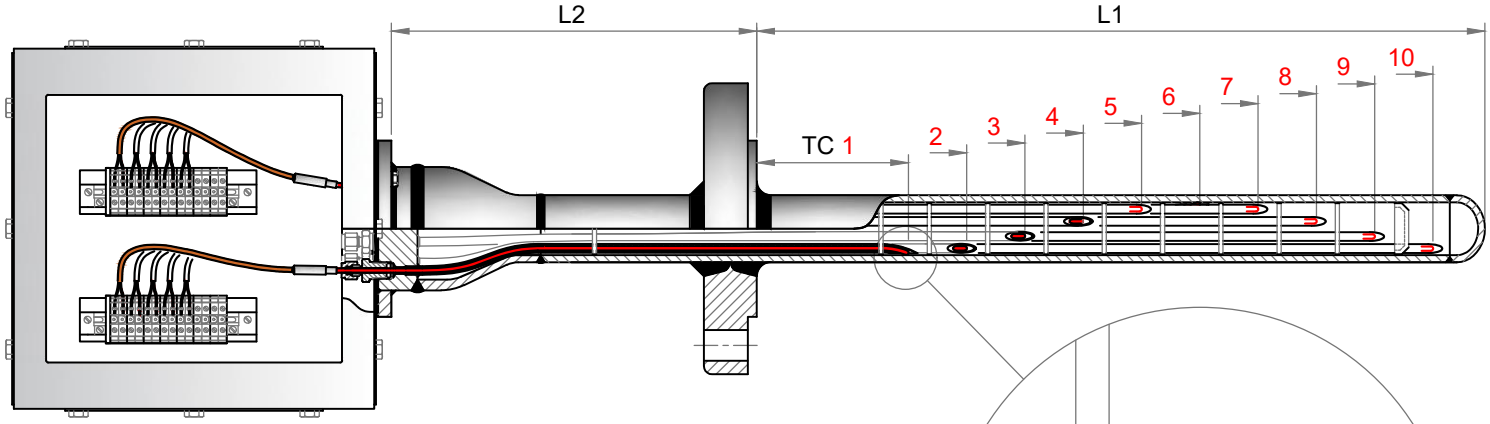

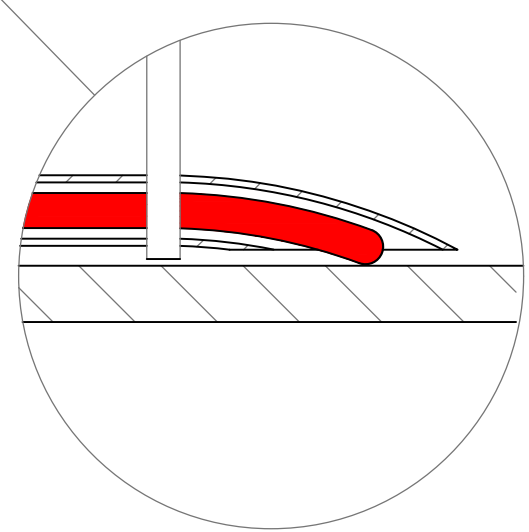

ENLARGED VIEW
Thermocouple Tip

- UP TO 20 POINTS AVAILABLE
- INDIVIDUAL INTERCHANGEABLE THERMOCOUPLES DURING PLANT OPERATION
- SAFETY SEAL CHAMBER
- FIXED RIGID JUNCTION BOX CONNECTION
- 1/8" OR 3mm Ø THERMOCOUPLES
- THERMOCOUPLE TOUCHES INSIDE OF THERMOWELL
- VARIABLE MECHCANICAL THERMOWELL SIZES, MATERIALS & MOUNTING
- LENGTHS UP TO 10 meters

DIMENSIONS IN MM UNLESS OTHERWISE STATED. TOLERANCES – Full Millimeters +/– 0.5mm One Decimal Place +/– 0.15mm Two Decimal Places +/– 0.025mm	CONTRACT NO.		Wahl Instruments, Inc. 234 Old Weaverville Road Asheville, NC 28804
	APPROVALS	DATE	Multipoint Thermocouple Assembly
MATERIAL	DRAWN Lynn Blount	10.28.16	Guide Tube Type - Rigid Connection
	CHECKED MJB	10.28.16	SIZE / CAGE CODE / DRAWING NO. PW-1086 / REV
FINISH	ISSUED		
DO NOT SCALE DRAWING			SCALE / SHEET OF

REVISIONS			
REV	DESCRIPTION	DATE	CHANGED BY

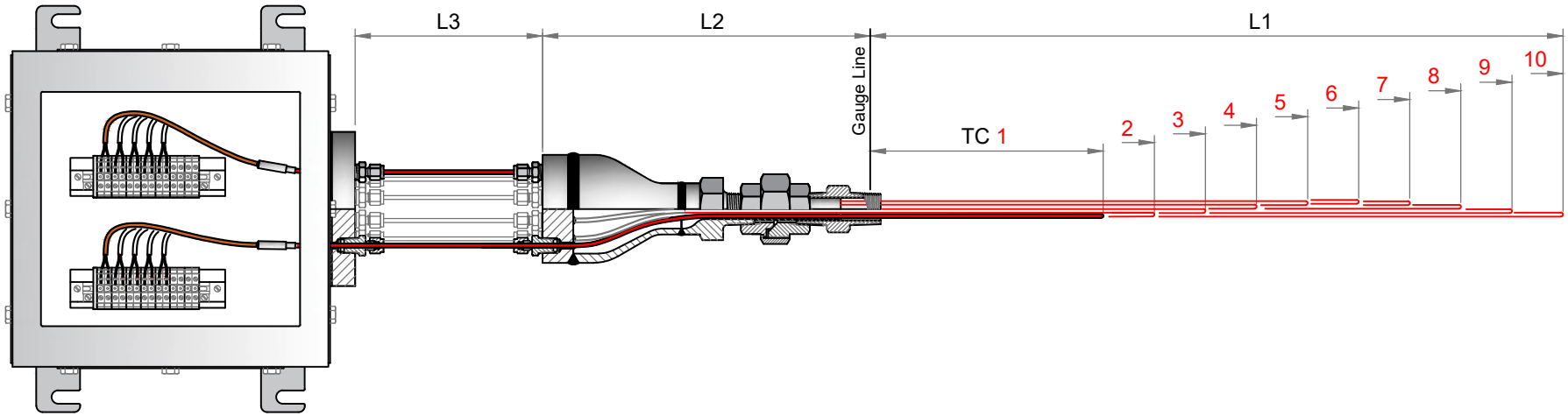

- UP TO 20 POINTS AVAILABLE
- INDIVIDUAL INTERCHANGEABLE THERMOCOUPLES DURING PLANT SHUTDOWN ONLY
- UNION FOR TOTAL THERMOCOUPLE BUNDLE REMOVAL & ORIENTATION
- SAFETY SEAL CHAMBER
- FLEXIBLE EXTENSION TO JUNCTION BOX WITH CONTINUOUS MINERAL INSULATED THERMOCOUPLE
- 1/8" OR 3mm Ø THERMOCOUPLES
- THERMOCOUPLE SIDE TOUCHES INSIDE WALL OF THERMOWELL
- THERMOCOUPLES MAY BE FITTED RADIALLY (Refer to Sheet 2)
- ALL LENGTHS MAY BE SUPPLIED

DIMENSIONS IN MM UNLESS OTHERWISE STATED. TOLERANCES – Full Millimeters +/– 0.5mm One Decimal Place +/– 0.15mm Two Decimal Places +/– 0.025mm	CONTRACT NO.		Wahl Instruments, Inc. 234 Old Weaverville Road Asheville, NC 28804
	APPROVALS	DATE	Multipoint T/C Assembly - Flexible Extension
MATERIAL	DRAWN Lynn Blount	10.28.16	T/C Bundle Type to suit Existing on Site Thermowell Tube
	CHECKED MJB	10.28.16	SIZE / CAGE CODE / DRAWING NO. PW-1087 / REV
FINISH	ISSUED		
DO NOT SCALE DRAWING			SCALE / SHEET 1 OF 3

REVISIONS			
REV	DESCRIPTION	DATE	CHANGED BY

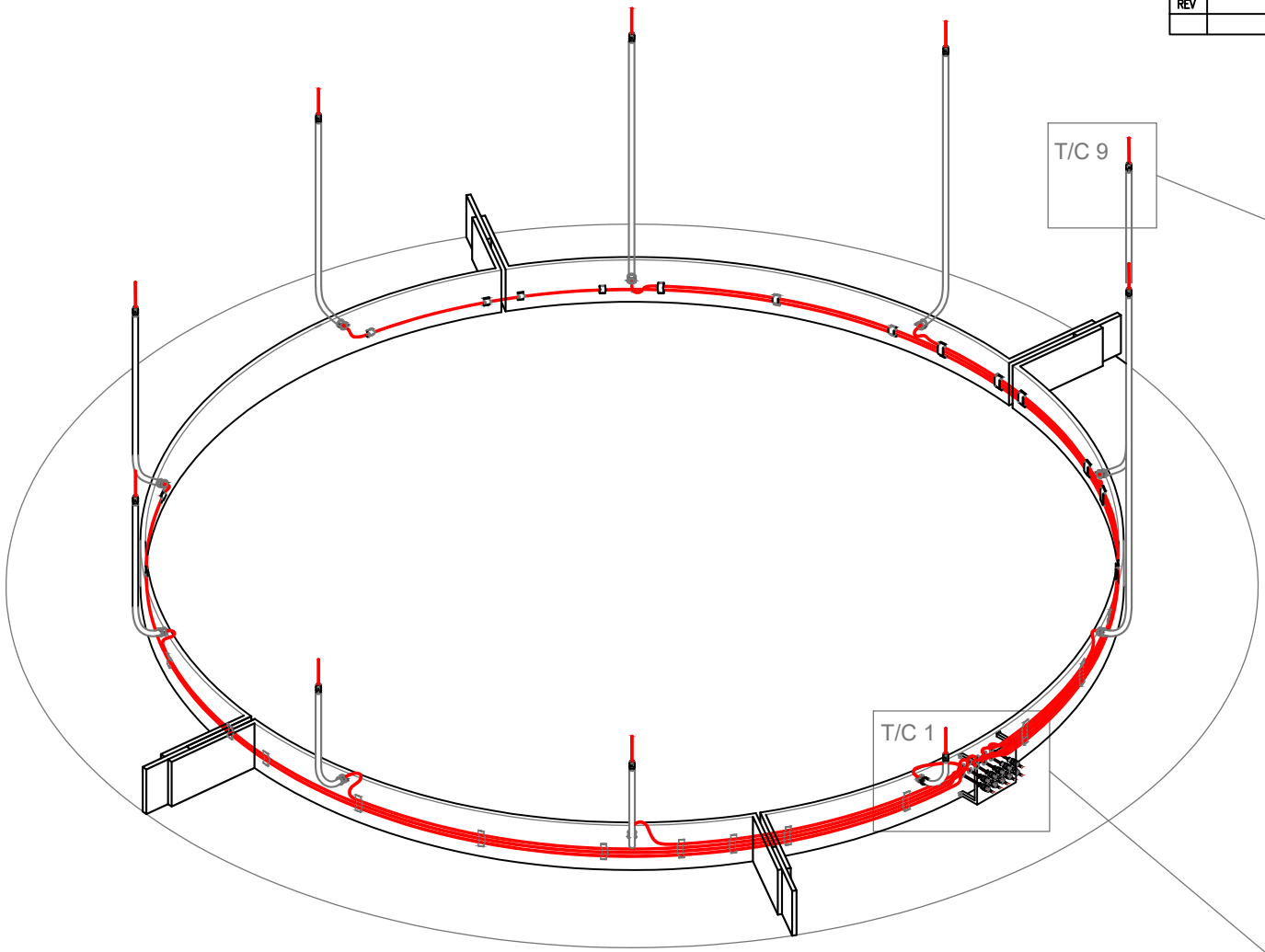

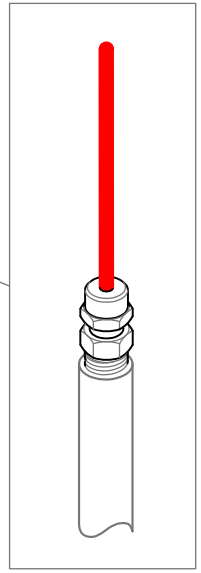

ENLARGED VIEW
Thermocouple Tip

ENLARGED VIEW
Internal Thermocouple Fixing

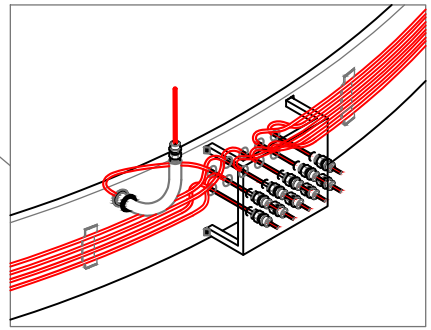

- TYPICAL RADIAL REACTOR POSITIONING
- MAY ALSO BE PROVIDED FOR THERMOCOUPLES TO INSERT INTO INDIVIDUAL VERTICAL INDIVIDUAL REACTOR TUBES (Refer to Sheet 3)
- HOT END THERMOCOUPLE TIP MAY BE PROVIDED WITH WELDED 1/16" Ø ST STEEL PULL WIRE TO ASSIST FITTING INTO VERTICAL REACTOR TUBE
- VARIOUS REACTOR TUBE CENTRALIZING FINS ARE AVAILABLE

DIMENSIONS IN MM UNLESS OTHERWISE STATED. TOLERANCES – Full Millimeters +/– 0.5mm One Decimal Place +/– 0.15mm Two Decimal Places +/– 0.025mm	CONTRACT NO.		Wahl Instruments, Inc. 234 Old Weaverville Road Asheville, NC 28804
	APPROVALS	DATE	Multipoint Thermocouple Assembly
MATERIAL	DRAWN Lynn Blount	10.28.16	Radial Positioning Design
	CHECKED MJB	10.28.16	SIZE / CAGE CODE / DRAWING NO. PW-1087 / REV
FINISH	ISSUED		
DO NOT SCALE DRAWING			SCALE / SHEET 2 OF 3

REVISIONS			
REV	DESCRIPTION	DATE	CHANGED BY

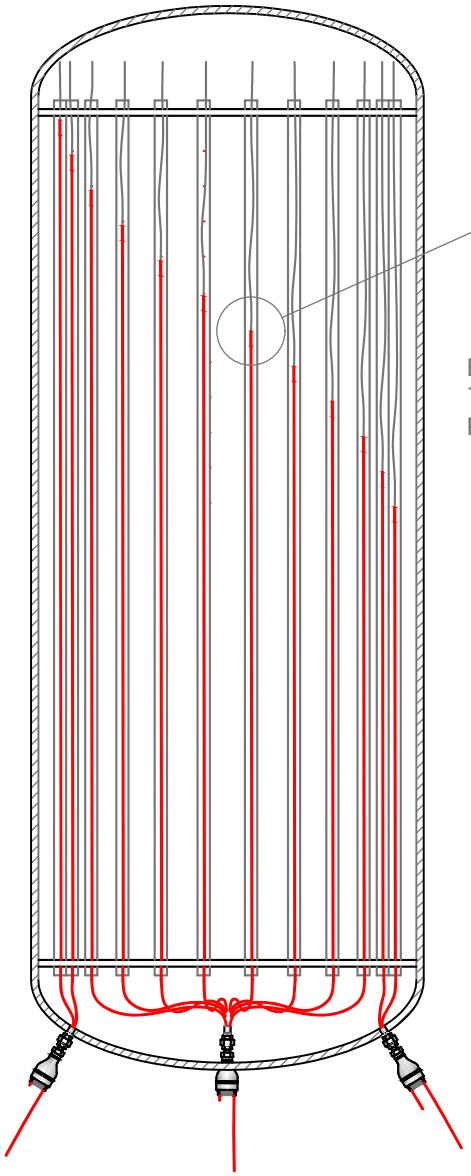

SECTION A - A

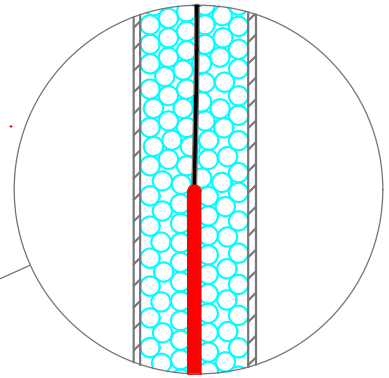

ENLARGED DETAIL
Thermocouple Tip,
Pull Wire & Catalyst

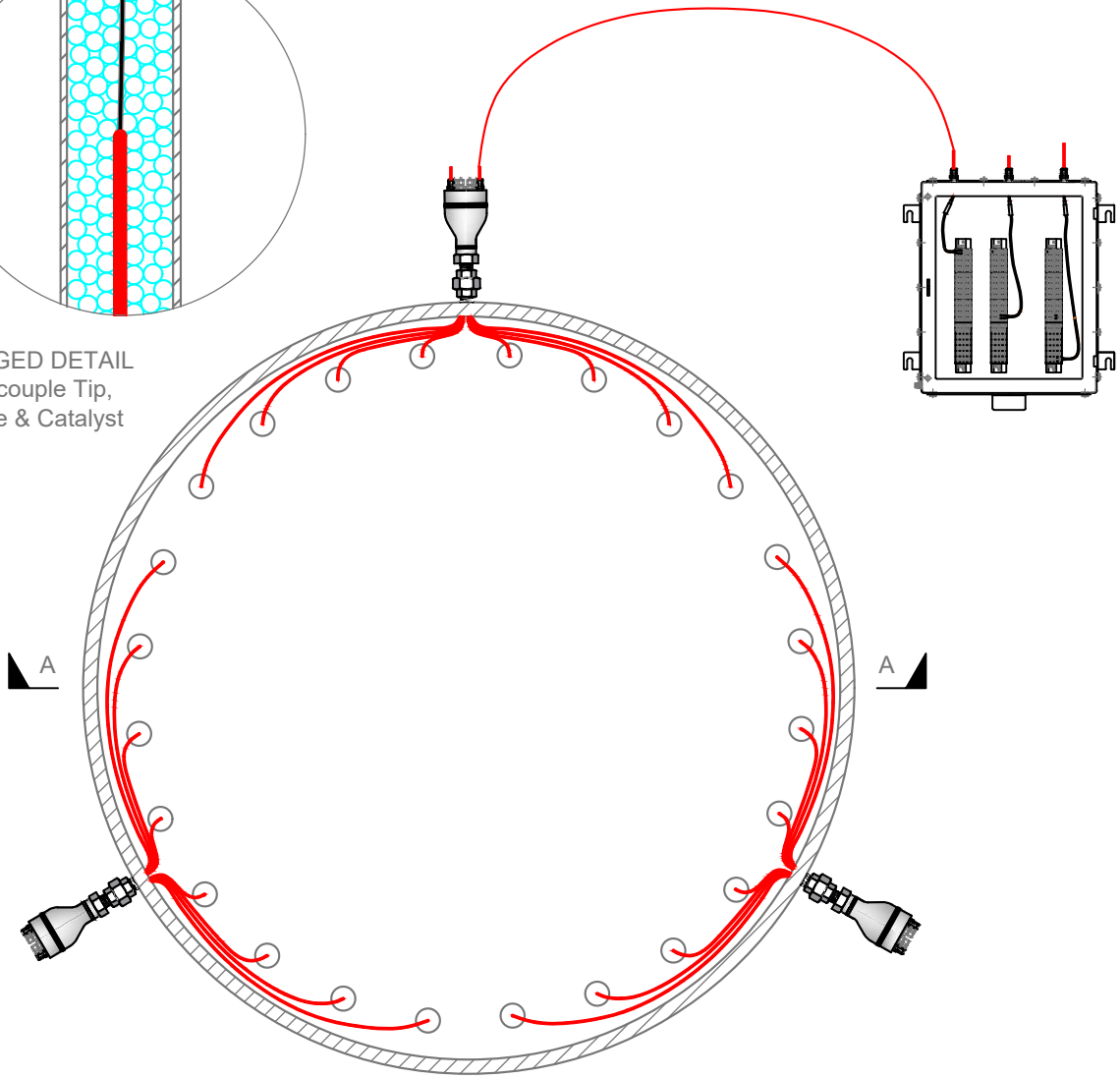

DIMENSIONS IN MM UNLESS OTHERWISE STATED. TOLERANCES – Full Millimeters +/– 0.5mm One Decimal Place +/– 0.15mm Two Decimal Places +/– 0.025mm	CONTRACT NO.		Wahl Instruments, Inc. 234 Old Weaverville Road Asheville, NC 28804
	APPROVALS	DATE	Multipoint Thermocouple Assembly
MATERIAL	DRAWN Lynn Blount	10.28.16	Radial Positioning Design
	CHECKED MJB	10.28.16	SIZE / CAGE CODE / DRAWING NO. PW-1087 / REV
FINISH	ISSUED		
DO NOT SCALE DRAWING			SCALE / SHEET 2 OF 3

REVISIONS			
REV	DESCRIPTION	DATE	CHANGED BY

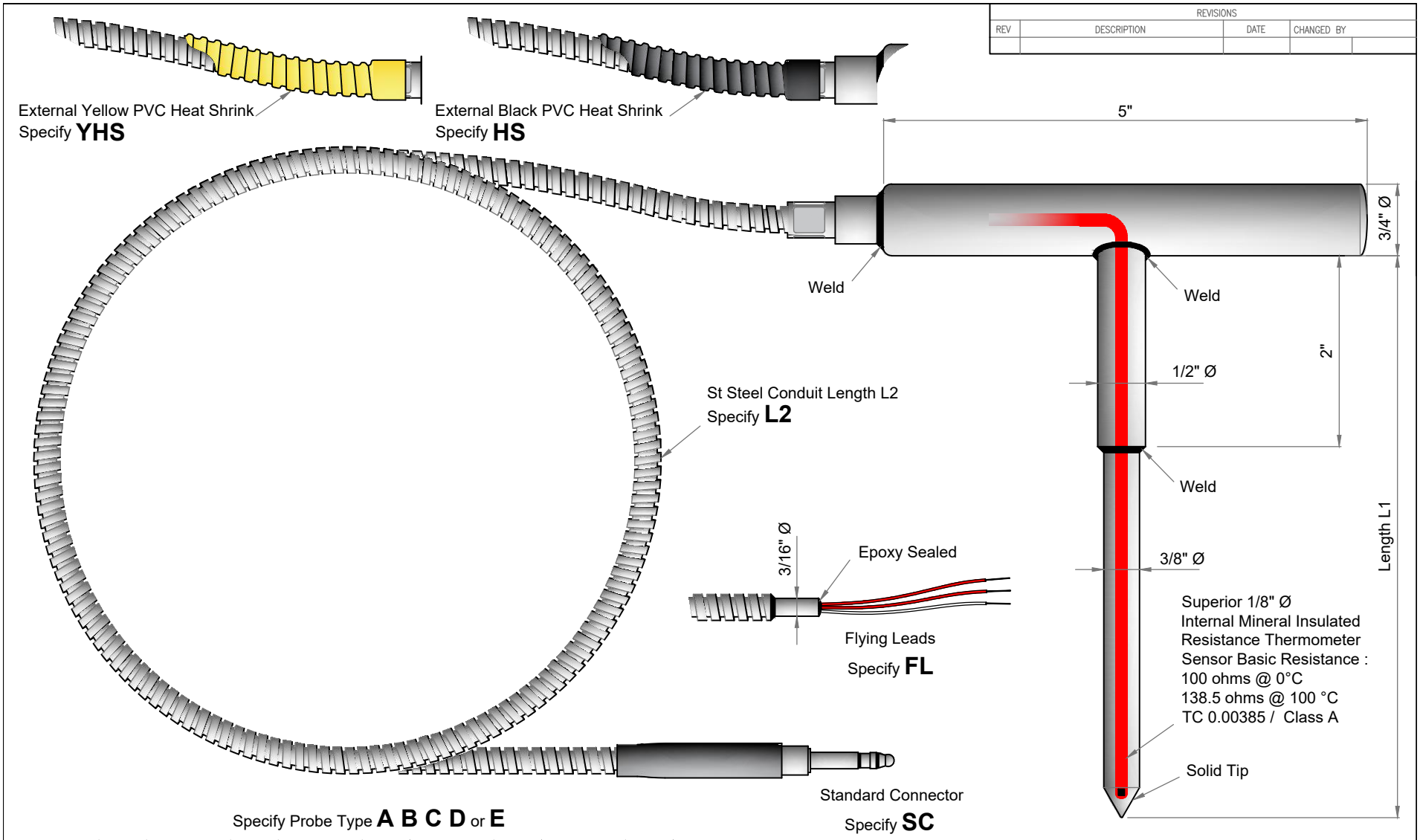

Specify Probe Type **A B C D** or **E**

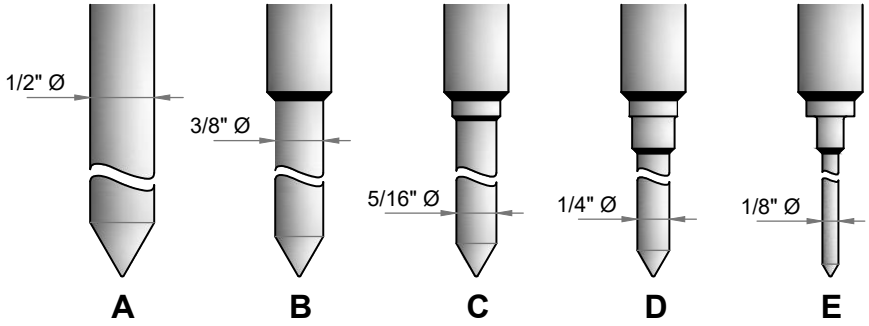

DIMENSIONS IN MM UNLESS OTHERWISE STATED. TOLERANCES – Full Millimeters +/– 0.5mm One Decimal Place +/– 0.15mm Two Decimal Places +/– 0.025mm	CONTRACT NO.		Wahl Instruments, Inc. 234 Old Weaverville Road Asheville, NC 28804
	APPROVALS	DATE	T Handle RTD Probe with Pointed Tip
MATERIAL	DRAWN Lynn Blount	9.19.16	
	CHECKED MJB	9.19.16	SIZE / CAGE CODE / DRAWING NO. PW-1065 / REV
FINISH	ISSUED		
DO NOT SCALE DRAWING			SCALE / SHEET OF

REVISIONS			
REV	DESCRIPTION	DATE	CHANGED BY

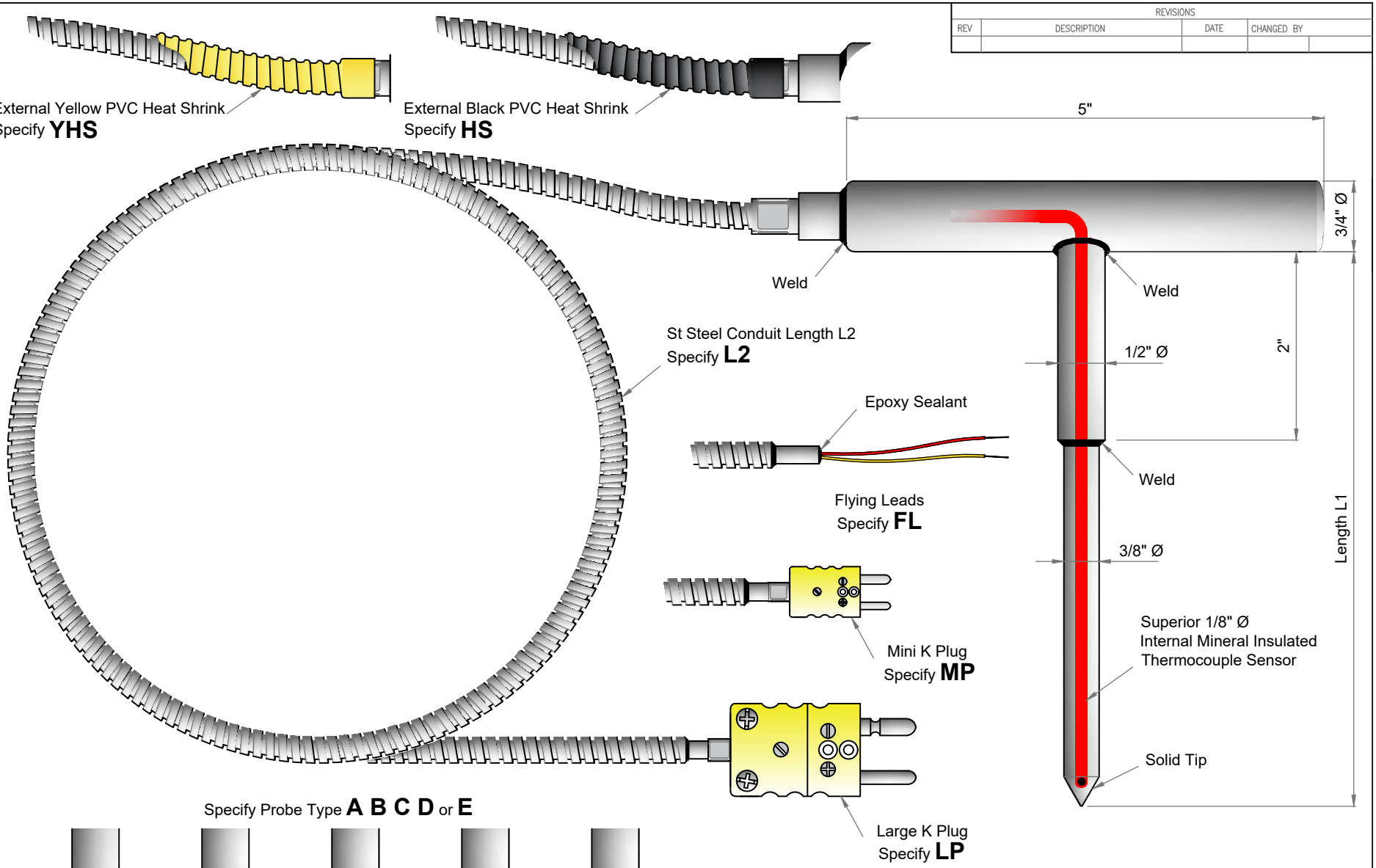

Specify Probe Type **A B C D** or **E**

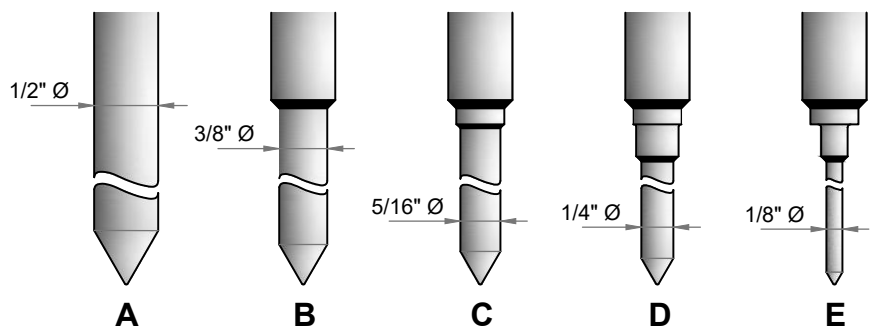

DIMENSIONS IN MM UNLESS OTHERWISE STATED. TOLERANCES – Full Millimeters +/– 0.5mm, One Decimal Place +/– 0.15mm, Two Decimal Places +/– 0.025mm	CONTRACT NO.	Wahl	Wahl Instruments, Inc. 234 Old Weaverville Road Asheville, NC 28804
	APPROVALS / DATE		T Handle T/C Probe with Pointed Tip
MATERIAL	DRAWN Lynn Blount 9.19.16		
	CHECKED MJB 9.19.16	SIZE / CAGE CODE	DRAWING NO. PW-1066 / REV
FINISH	ISSUED		
DO NOT SCALE DRAWING		SCALE	SHEET OF

REVISIONS			
REV	DESCRIPTION	DATE	CHANGED BY

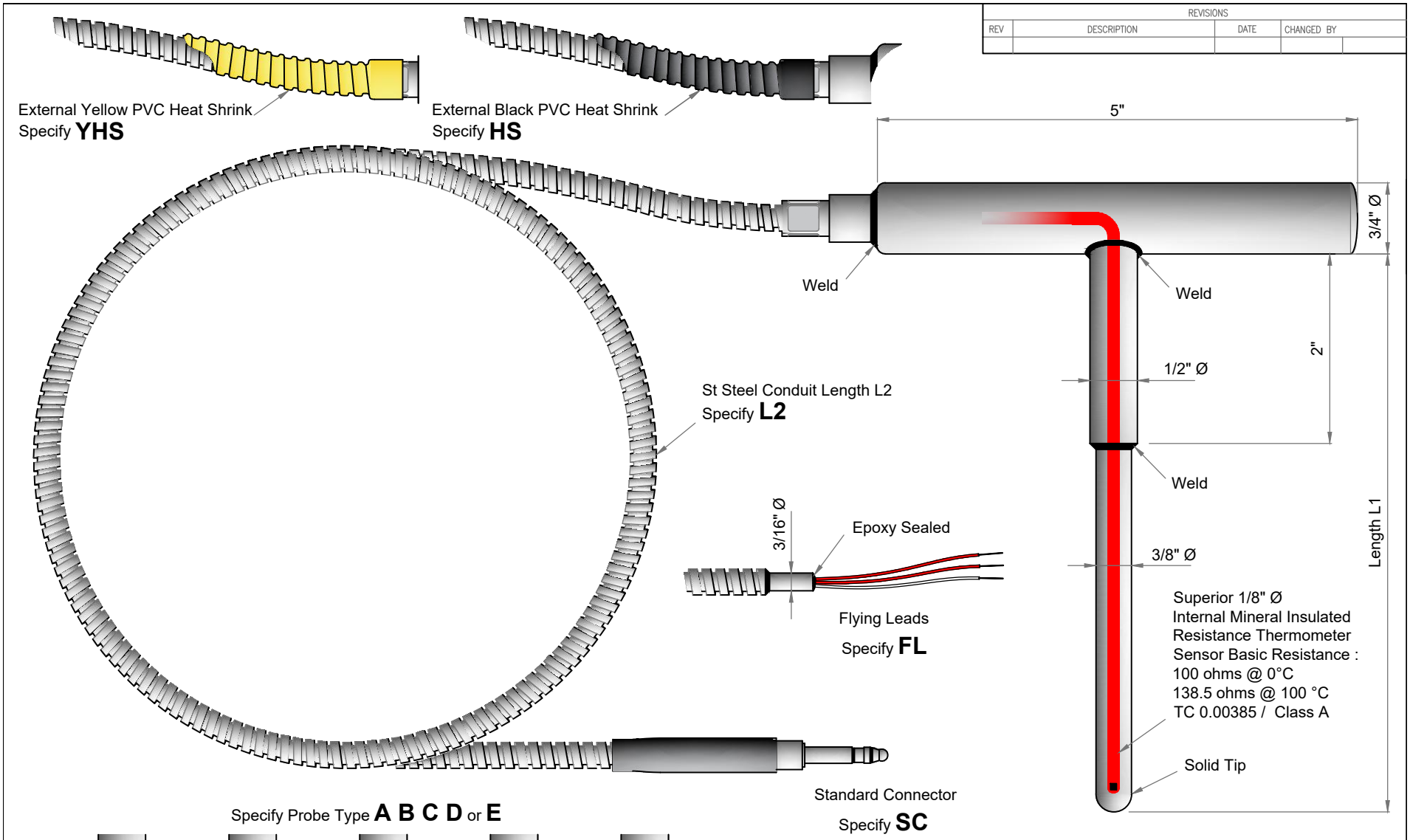

Specify Probe Type **A B C D** or **E**

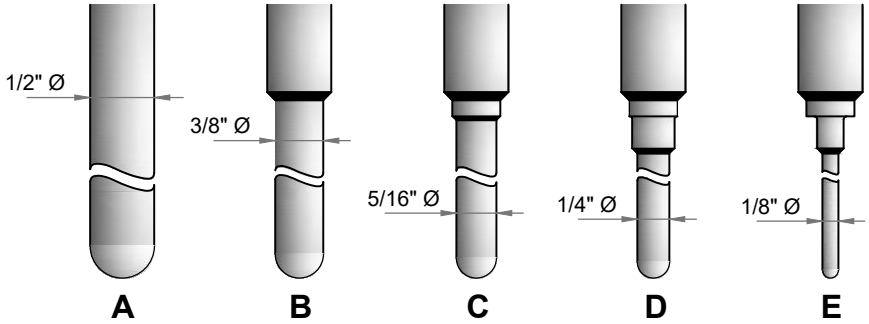

DIMENSIONS IN MM UNLESS OTHERWISE STATED. TOLERANCES – Full Millimeters +/– 0.5mm, One Decimal Place +/– 0.15mm, Two Decimal Places +/– 0.025mm	CONTRACT NO.	Wahl	Wahl Instruments, Inc. 234 Old Weaverville Road Asheville, NC 28804
	APPROVALS / DATE		T Handle RTD Probe with Round Tip
MATERIAL	DRAWN Lynn Blount 9.21.16		
	CHECKED MJB 9.21.16	SIZE / CAGE CODE	DRAWING NO. PW-1067 / REV
FINISH	ISSUED		
DO NOT SCALE DRAWING		SCALE	SHEET OF

REVISIONS			
REV	DESCRIPTION	DATE	CHANGED BY

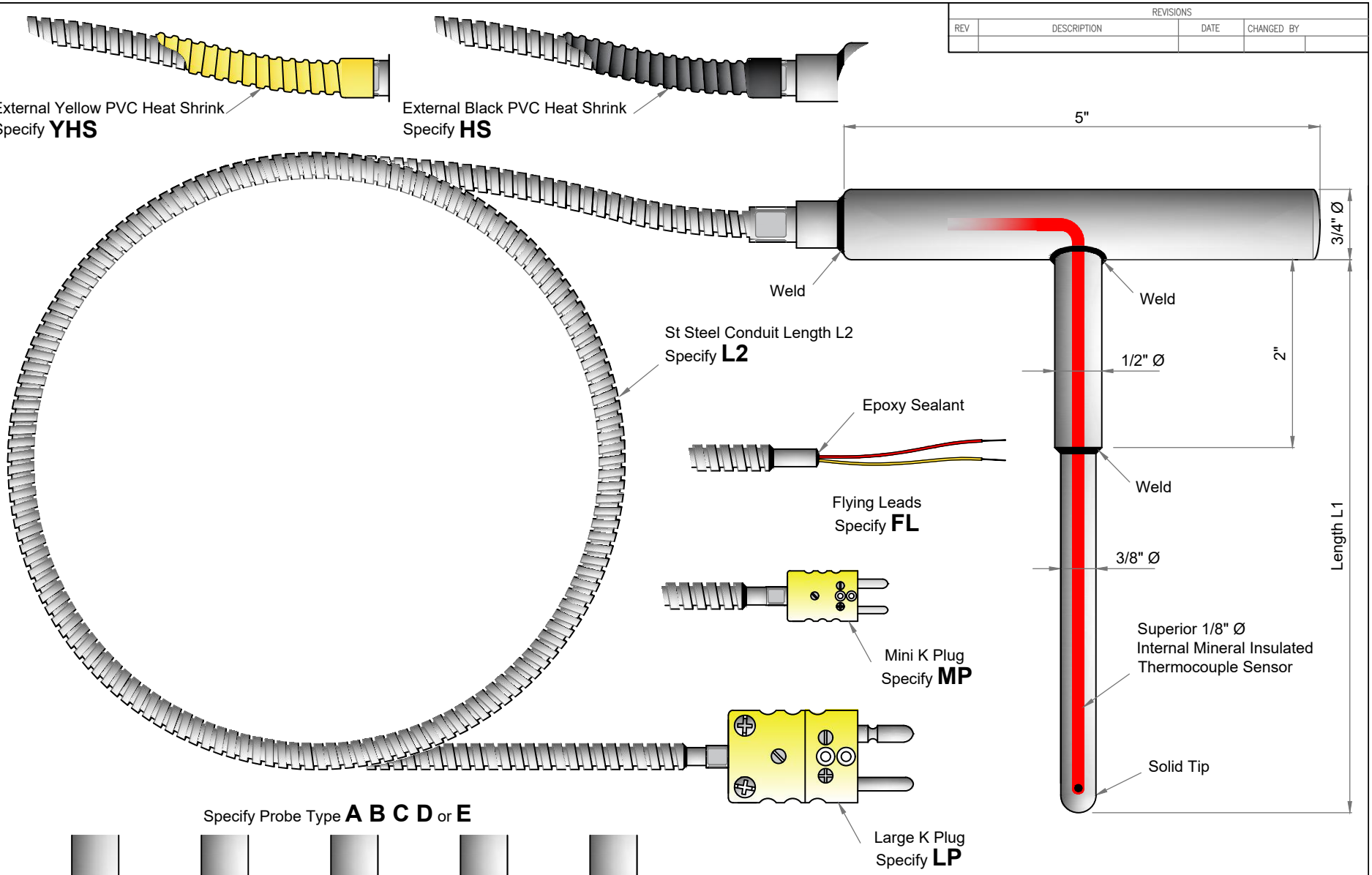

Specify Probe Type **A B C D** or **E**

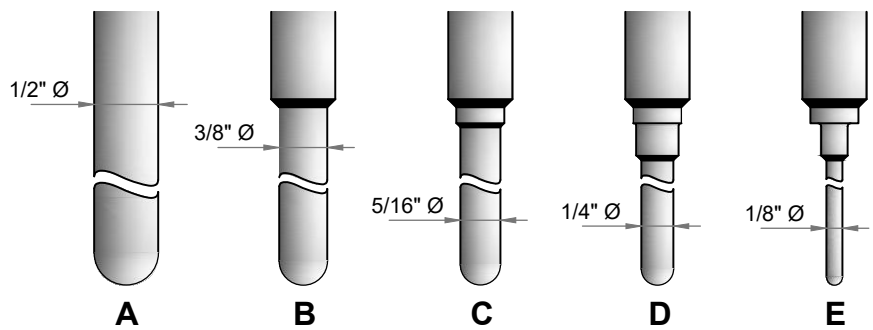

DIMENSIONS IN MM UNLESS OTHERWISE STATED. TOLERANCES – Full Millimeters +/– 0.5mm One Decimal Place +/– 0.15mm Two Decimal Places +/– 0.025mm	CONTRACT NO.	Wahl	Wahl Instruments, Inc. 234 Old Weaverville Road Asheville, NC 28804
	APPROVALS / DATE		T Handle T/C Probe with Round Tip
MATERIAL	DRAWN Lynn Blount 9.21.16		
	CHECKED MJB 9.21.16	SIZE / CAGE CODE	DRAWING NO. PW-1068 / REV
FINISH	ISSUED		
DO NOT SCALE DRAWING		SCALE	SHEET OF

REVISIONS			
REV	DESCRIPTION	DATE	CHANGED BY

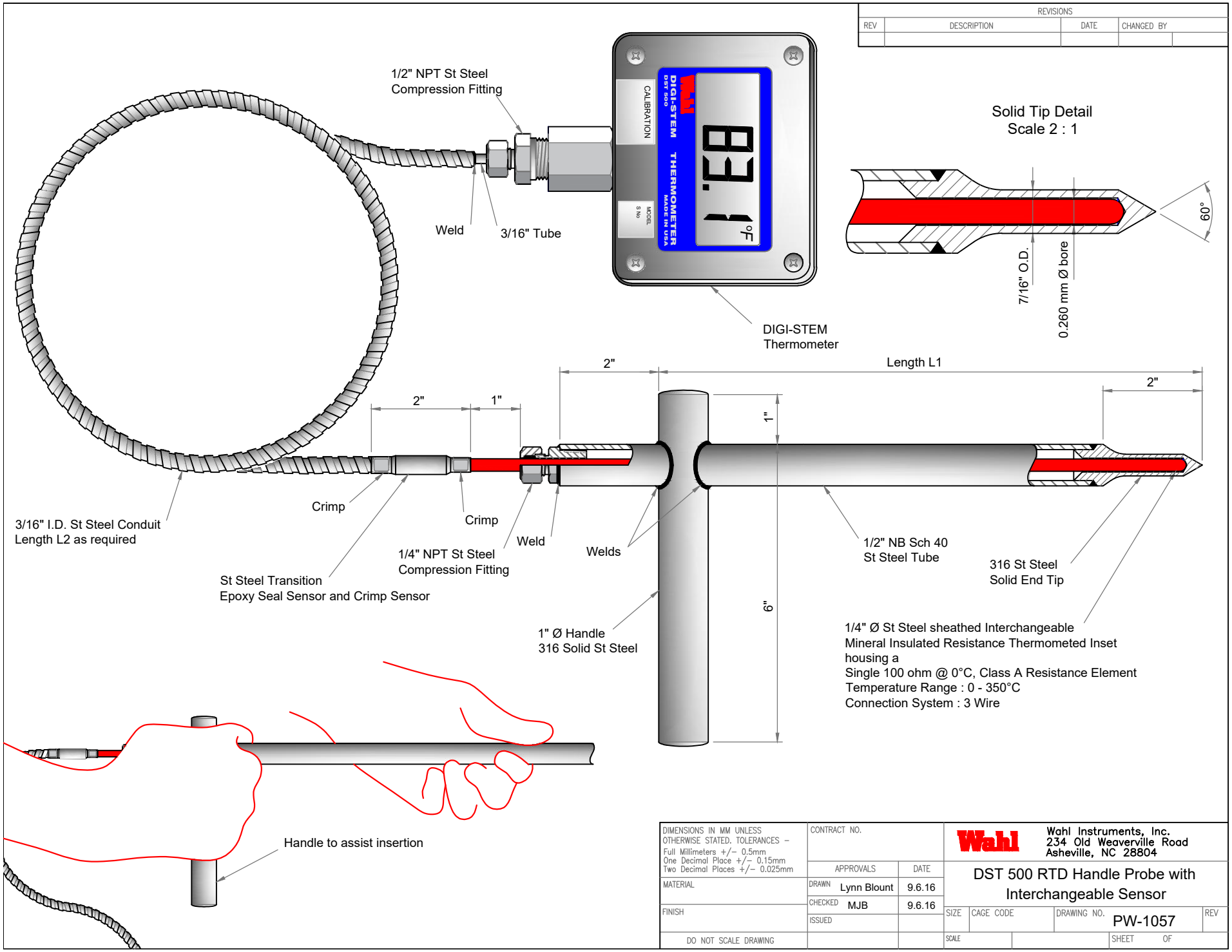

DIMENSIONS IN MM UNLESS OTHERWISE STATED. TOLERANCES – Full Millimeters +/– 0.5mm One Decimal Place +/– 0.15mm Two Decimal Places +/– 0.025mm	CONTRACT NO.		Wahl Instruments, Inc. 234 Old Weaverville Road Asheville, NC 28804
	APPROVALS	DATE	DST 500 RTD Handle Probe with Interchangeable Sensor
MATERIAL	DRAWN Lynn Blount	9.6.16	
	CHECKED MJB	9.6.16	SIZE / CAGE CODE / DRAWING NO. PW-1057 / REV
FINISH	ISSUED		
DO NOT SCALE DRAWING			SCALE / SHEET OF

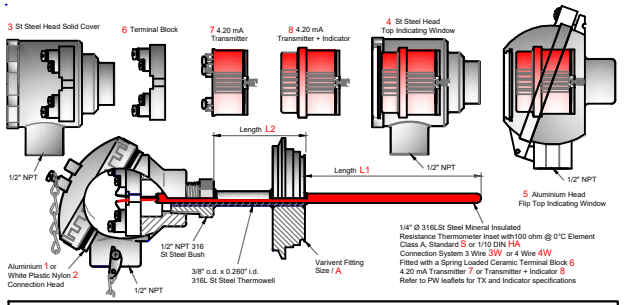

To Order Specify - PW.2010 / Head Type / 6,7 or 8 / Mounting & size / L1 / L2 / S or HA / 3 or 4 Wire / TX Range / Fixed Point Calibration, if required

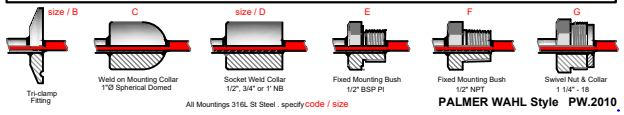

All Mountings 316L St Steel . specify code / size

PALMER WAHL Style PW.2010

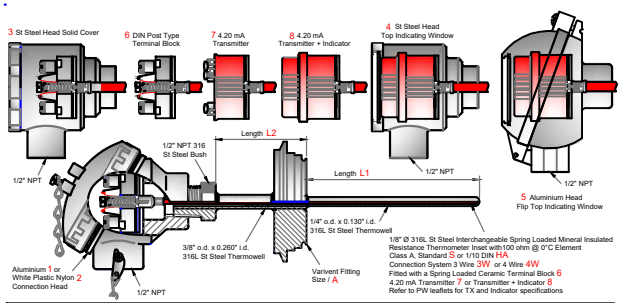

To Order Specify - PW.2011 / Head Type / 6,7 or 8 / Mounting & size / L1 / L2 / S or HA / 3 or 4 Wire / TX Range / Fixed Point Calibration, if required

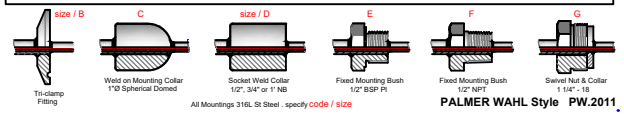

All Mountings 316L St Steel . specify code / size

PALMER WAHL Style PW.2011

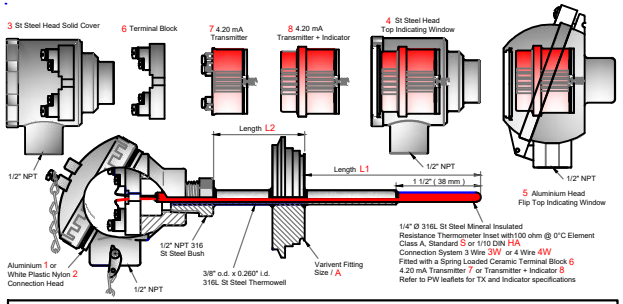

To Order Specify - PW.2012 / Head Type / 6,7 or 8 / Mounting & size / L1 / L2 / S or HA / 3 or 4 Wire / TX Range / Fixed Point Calibration, if required

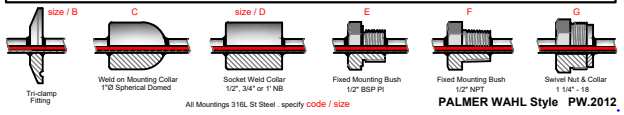

All Mountings 316L St Steel . specify code / size

PALMER WAHL Style PW.2012

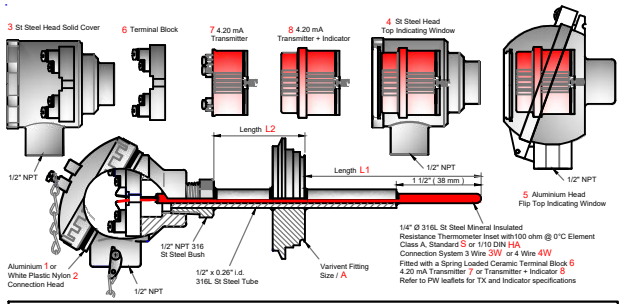

To Order Specify - PW.2013 / Head Type / 6,7 or 8 / Mounting & size / L1 / L2 / S or HA / 3 or 4 Wire / TX Range / Fixed Point Calibration, if required

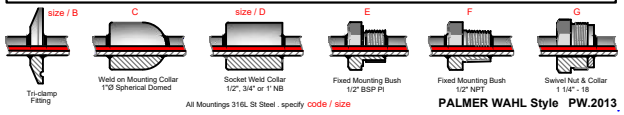

All Mountings 316L St Steel . specify code / size

PALMER WAHL Style PW.2013

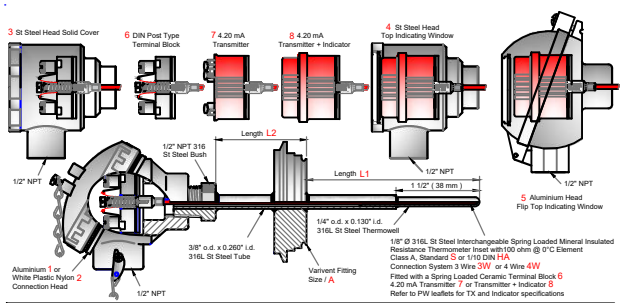

To Order Specify - PW.2014 / Head Type / 6,7 or 8 / Mounting & size / L1 / L2 / S or HA / 3 or 4 Wire / TX Range / Fixed Point Calibration, if required

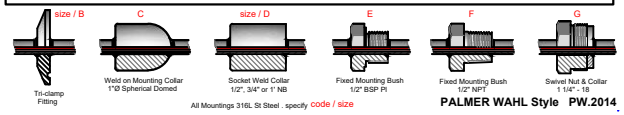

All Mountings 316L St Steel . specify code / size

PALMER WAHL Style PW.2014

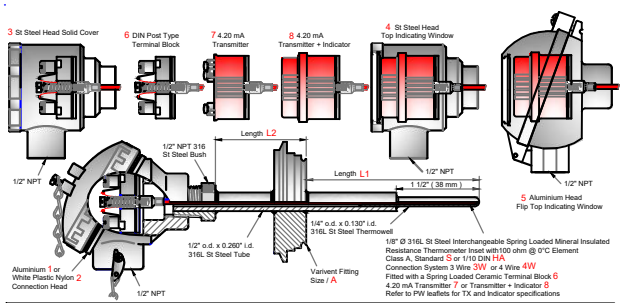

To Order Specify - PW.2015 / Head Type / 6,7 or 8 / Mounting & size / L1 / L2 / S or HA / 3 or 4 Wire / TX Range / Fixed Point Calibration, if required

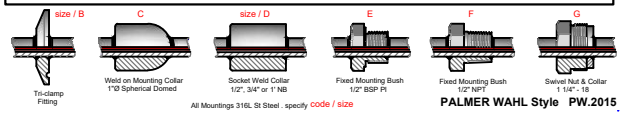

All Mountings 316L St Steel . specify code / size

PALMER WAHL Style PW.2015

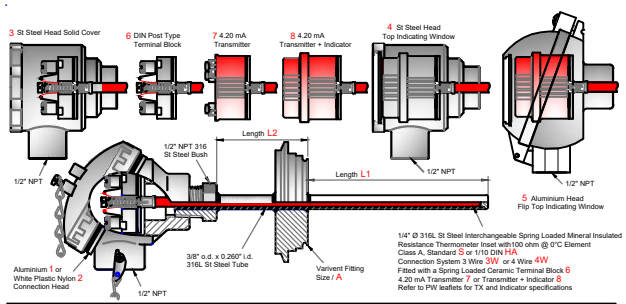

To Order Specify - PW.2016 / Head Type / 6,7 or 8 / Mounting & size / L1 / L2 / S or HA / 3 or 4 Wire / TX Range / Fixed Point Calibration, if required

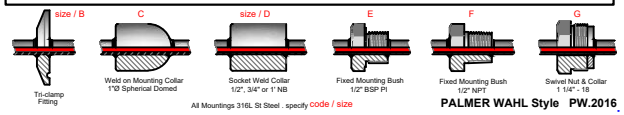

All Mountings 316L St Steel . specify code / size

PALMER WAHL Style PW.2016

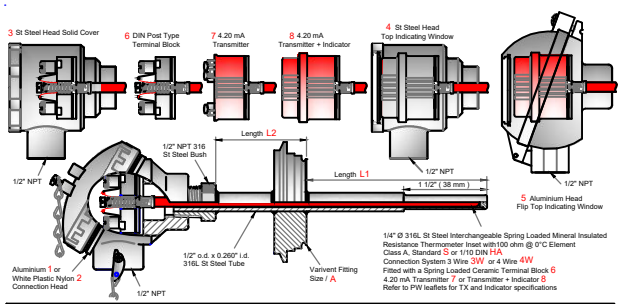

To Order Specify - PW.2017 / Head Type / 6,7 or 8 / Mounting & size / L1 / L2 / S or HA / 3 or 4 Wire / TX Range / Fixed Point Calibration, if required

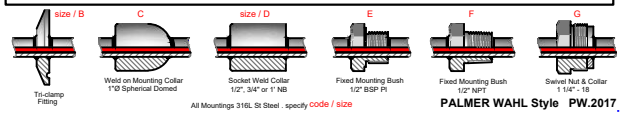

All Mountings 316L St Steel . specify code / size

PALMER WAHL Style PW.2017

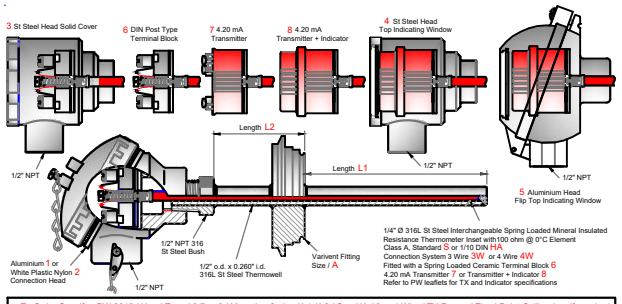

To Order Specify - PW.2018 / Head Type / 6,7 or 8 / Mounting & size / L1 / L2 / S or HA / 3 or 4 Wire / TX Range / Fixed Point Calibration, if required

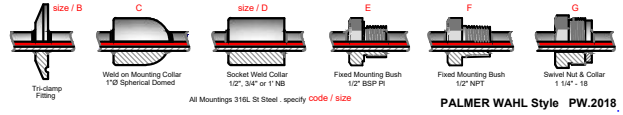

All Mountings 316L St Steel . specify code / size

PALMER WAHL Style PW.2018

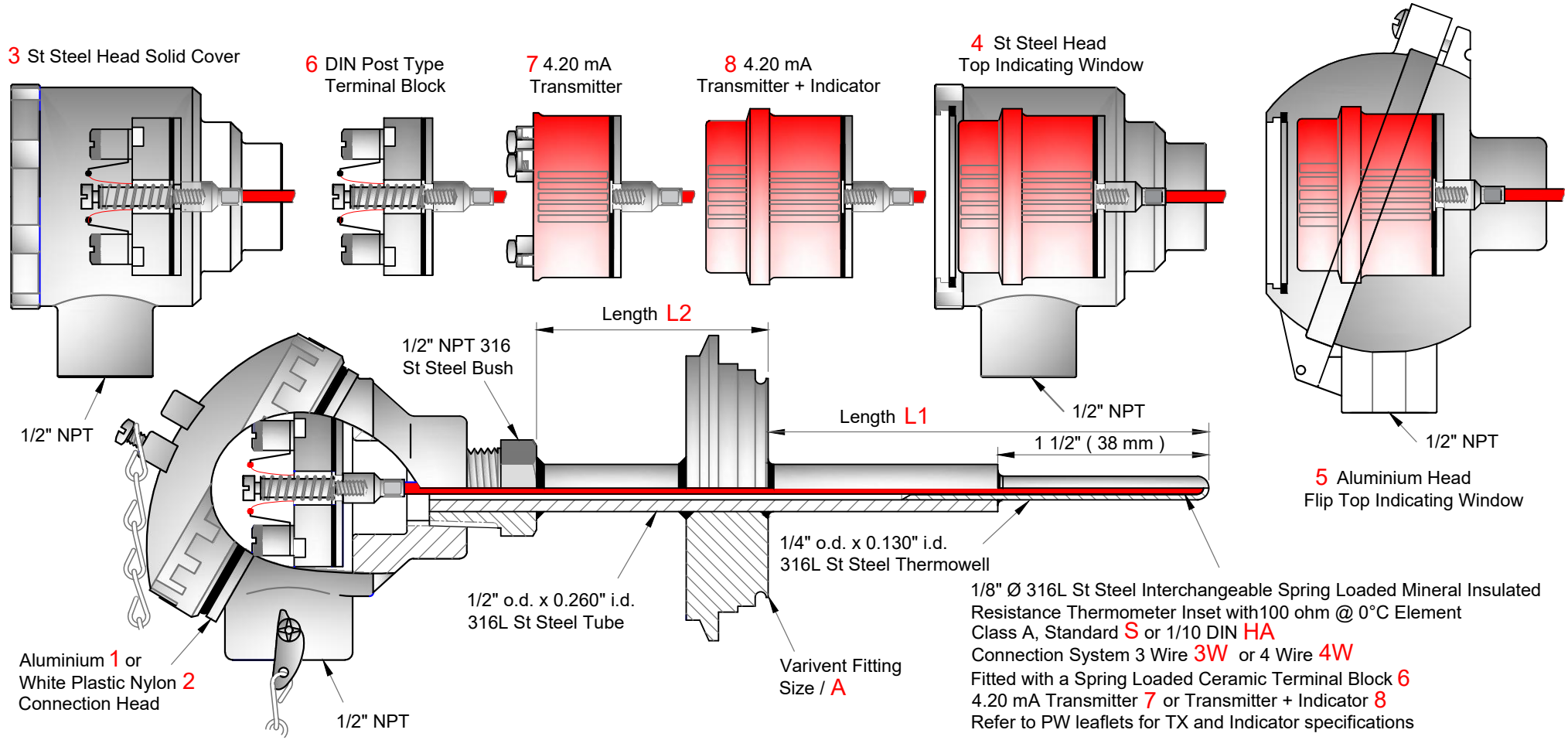

1/8" Ø 316L St Steel Interchangeable Spring Loaded Mineral Insulated Resistance Thermometer Inset with100 ohm @ 0°C Element
Class A, Standard S or 1/10 DIN HA
Connection System 3 Wire 3W or 4 Wire 4W
Fitted with a Spring Loaded Ceramic Terminal Block 6
4.20 mA Transmitter 7 or Transmitter + Indicator 8
Refer to PW leaflets for TX and Indicator specifications

To Order Specify - PW.2015 / Head Type / 6,7 or 8 / Mounting & size / L1 / L2 / S or HA / 3 or 4 Wire / TX Range / Fixed Point Calibration, if required

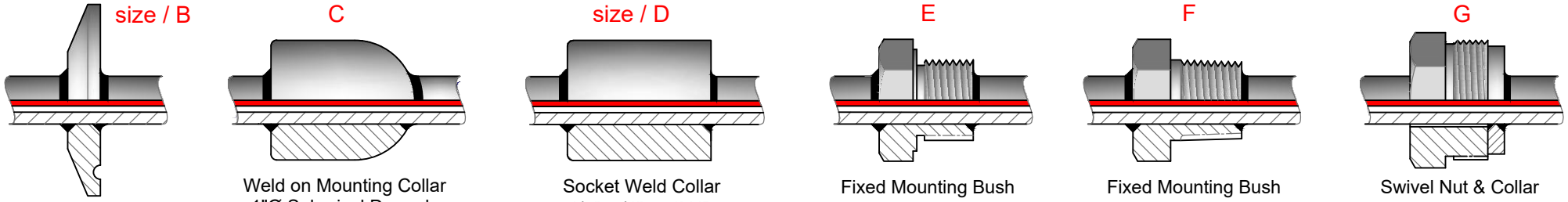

Tri-clamp Fitting

Weld on Mounting Collar 1"Ø Spherical Domed

Socket Weld Collar 1/2", 3/4" or 1' NB

Fixed Mounting Bush 1/2" BSP Pl

Fixed Mounting Bush 1/2" NPT

Swivel Nut & Collar 1 1/4" - 18

All Mountings 316L St Steel . specify code / size

PALMER WAHL Style PW.2015

Fixed DIGI-STEM Thermometer
DST500 or DST600 Series
Refer to PW leaflets for full DST specifications, selection and DST code

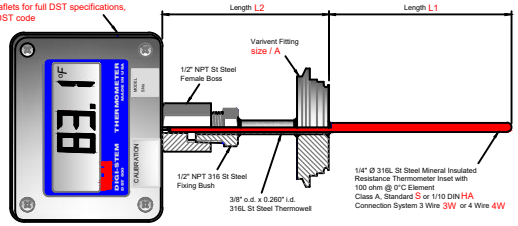

To Order specify - PW.2020 / DST Type / Mounting & size / L1 / L2 / S or HA / 3 or 4 Wire / Fixed Point Calibration if required

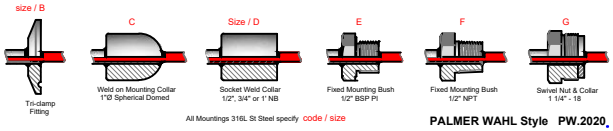

All Mountings 316L St Steel specify code / size

PALMER WAHL Style PW.2020

Fixed DIGI-STEM Thermometer
DST500 or DST600 Series
Refer to PW leaflets for full DST specifications, selection and DST code

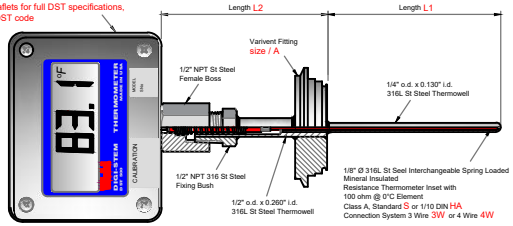

To Order specify - PW.2021 / DST Type / Mounting & size / L1 / L2 / S or HA / 3 or 4 Wire / Fixed Point Calibration if required

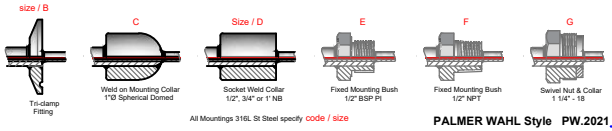

All Mountings 316L St Steel specify code / size

PALMER WAHL Style PW.2021

Fixed DIGI-STEM Thermometer
DST500 or DST600 Series
Refer to PW leaflets for full DST specifications, selection and DST code

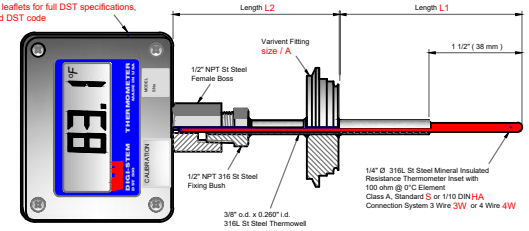

To Order specify - PW.2022 / DST Type / Mounting & size / L1 / L2 / S or HA / 3 or 4 Wire / Fixed Point Calibration if required

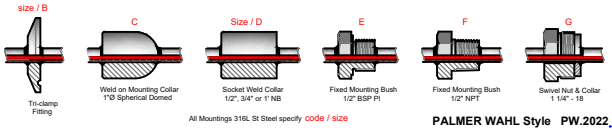

All Mountings 316L St Steel specify code / size

PALMER WAHL Style PW.2022

Fixed DIGI-STEM Thermometer
DST500 or DST600 Series
Refer to PW leaflets for full DST specifications, selection and DST code

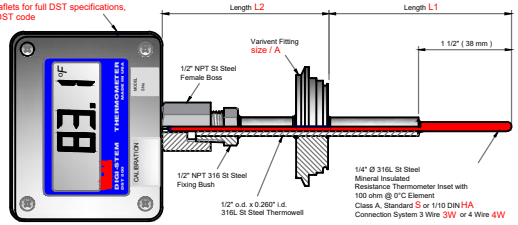

To Order specify - PW.2023 / DST Type / Mounting & size / L1 / L2 / S or HA / 3 or 4 Wire / Fixed Point Calibration if required

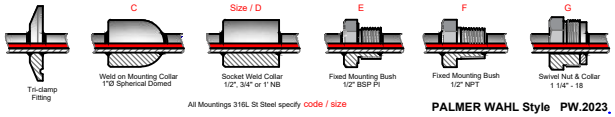

All Mountings 316L St Steel specify code / size

PALMER WAHL Style PW.2023

Fixed DIGI-STEM Thermometer
DST500 or DST600 Series
Refer to PW leaflets for full DST specifications, selection and DST code

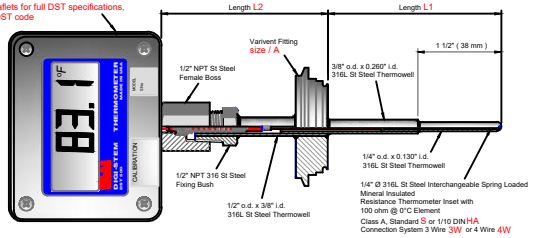

To Order specify - PW.2024 / DST Type / Mounting & size / L1 / L2 / S or HA / 3 or 4 Wire / Fixed Point Calibration if required

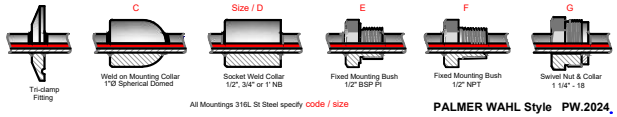

All Mountings 316L St Steel specify code / size

PALMER WAHL Style PW.2024

Fixed DIGI-STEM Thermometer
DST500 or DST600 Series
Refer to PW leaflets for full DST specifications, selection and DST code

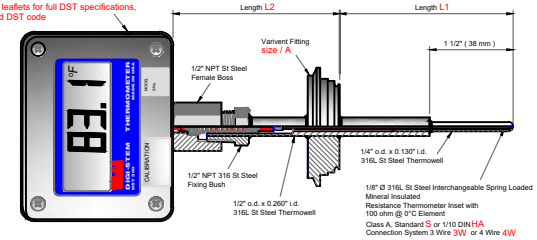

To Order specify - PW.2025 / DST Type / Mounting & size / L1 / L2 / S or HA / 3 or 4 Wire / Fixed Point Calibration if required

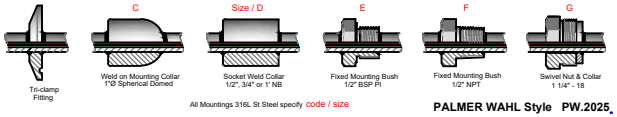

All Mountings 316L St Steel specify code / size

PALMER WAHL Style PW.2025

Fixed DIGI-STEM Thermometer
DST500 or DST600 Series
Refer to PW leaflets for full DST specifications, selection and DST code

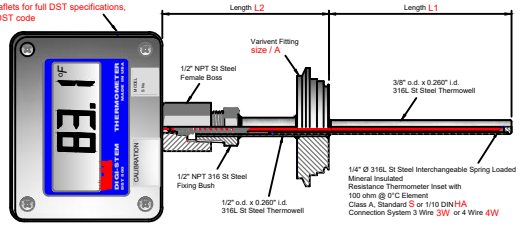

To Order specify - PW.2026 / DST Type / Mounting & size / L1 / L2 / S or HA / 3 or 4 Wire / Fixed Point Calibration if required

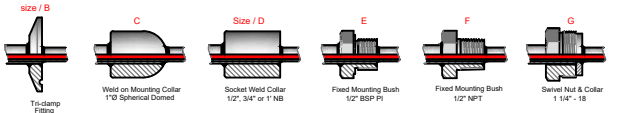

All Mountings 316L St Steel specify code / size

PALMER WAHL Style PW.2026

Fixed DIGI-STEM Thermometer
DST500 or DST600 Series
Refer to PW leaflets for full DST specifications, selection and DST code

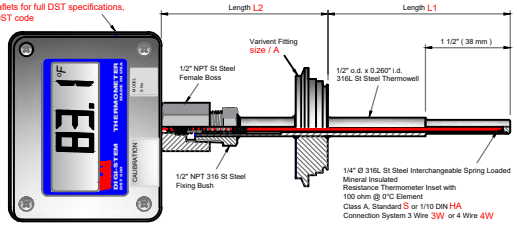

To Order specify - PW.2027 / DST Type / Mounting & size / L1 / L2 / S or HA / 3 or 4 Wire / Fixed Point Calibration if required

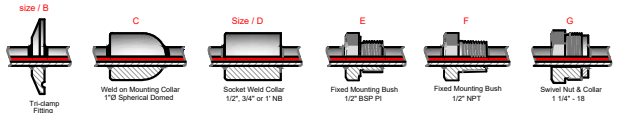

All Mountings 316L St Steel specify code / size

PALMER WAHL Style PW.2027

Fixed DIGI-STEM Thermometer
DST500 or DST600 Series
Refer to PW leaflets for full DST specifications, selection and DST code

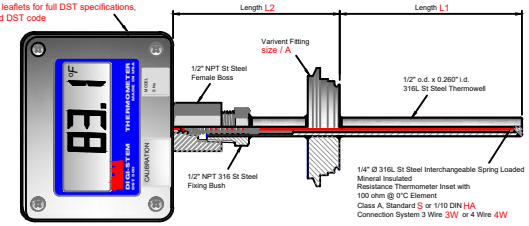

To Order specify - PW.2028 / DST Type / Mounting & size / L1 / L2 / S or HA / 3 or 4 Wire / Fixed Point Calibration if required

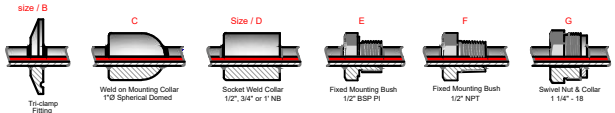

All Mountings 316L St Steel specify code / size

PALMER WAHL Style PW.2028

Fixed DIGI-STEM Thermometer
DST500 or DST600 Series

Refer to PW leaflets for full DST specifications, selection and DST code

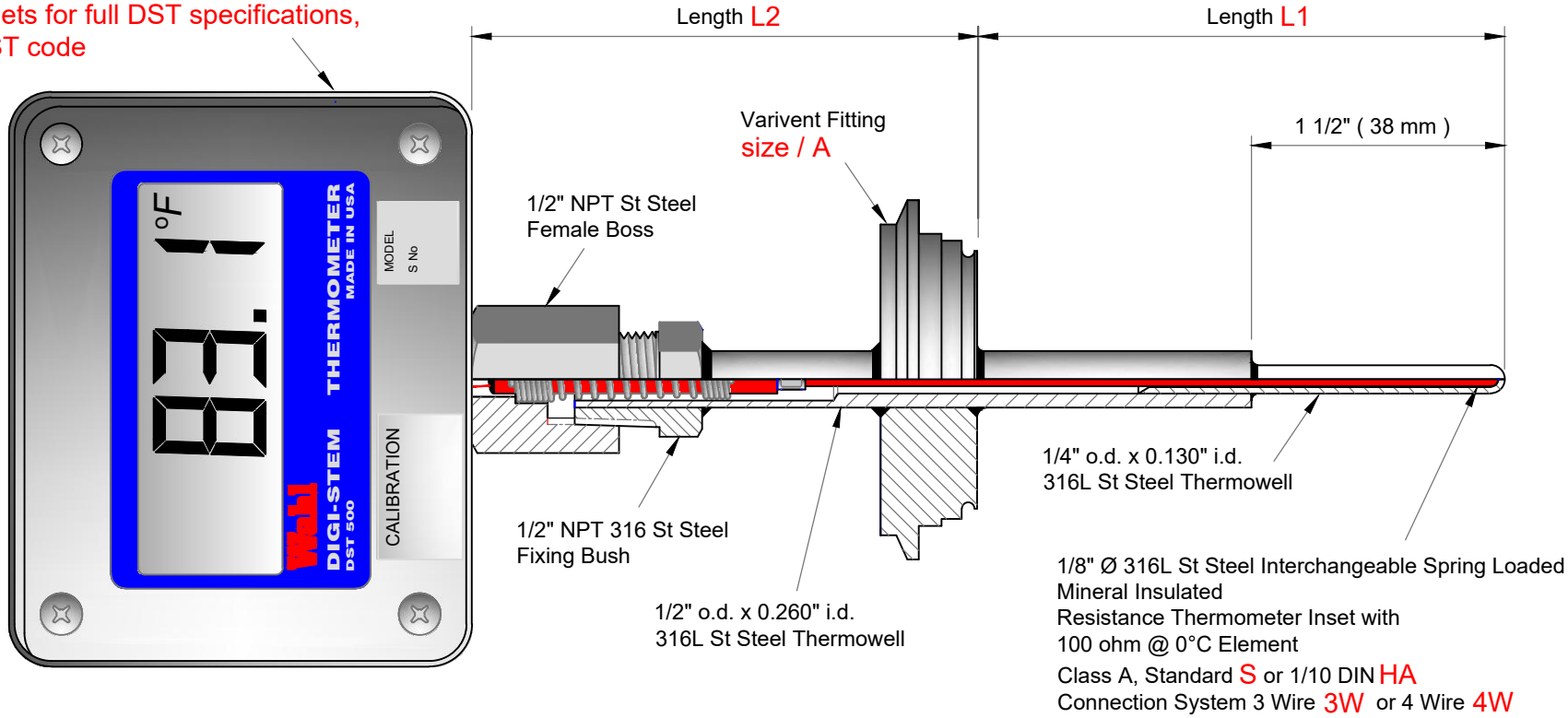

To Order specify - PW.2025 / DST Type / Mounting & size / L1 / L2 / S or HA / 3 or 4 Wire / Fixed Point Calibration if required

size / B

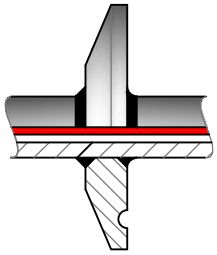

Tri-clamp
Fitting

C

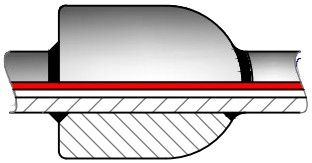

Weld on Mounting Collar
1"Ø Spherical Domed

Size / D

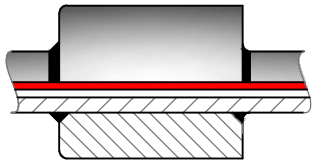

Socket Weld Collar
1/2", 3/4" or 1' NB

E

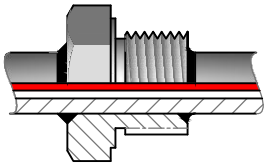

Fixed Mounting Bush
1/2" BSP Pl

F

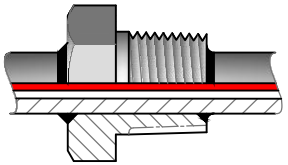

Fixed Mounting Bush
1/2" NPT

G

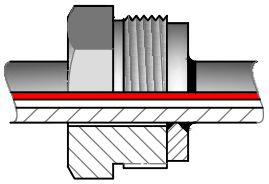

Swivel Nut & Collar
1 1/4" - 18

All Mountings 316L St Steel specify code / size

PALMER WAHL Style PW.2025

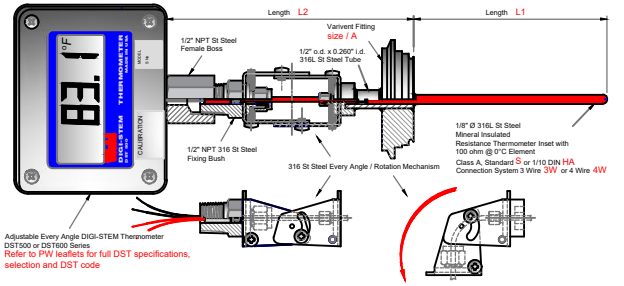

To Order specify - PW.2030 / DST Type / Mounting & size / L1 / L2 / S or HA / 3 or 4 Wire / Fixed Point Calibration if required

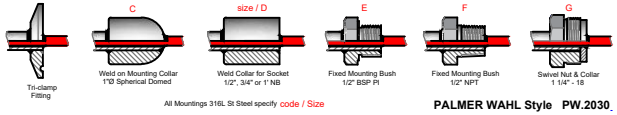

All Mountings 316L St Steel specify code / Size

PALMER WAHL Style PW.2030

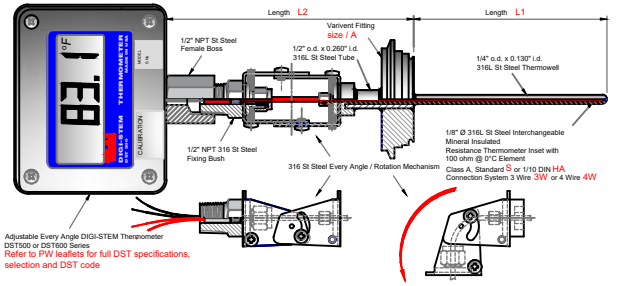

To Order specify - PW.2031 / DST Type / Mounting & size / L1 / L2 / S or HA / 3 or 4 Wire / Fixed Point Calibration if required

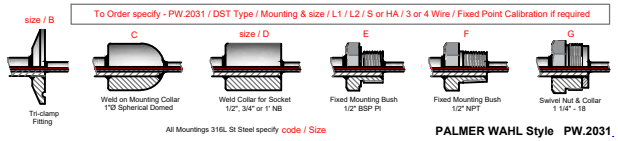

All Mountings 316L St Steel specify code / Size

PALMER WAHL Style PW.2031

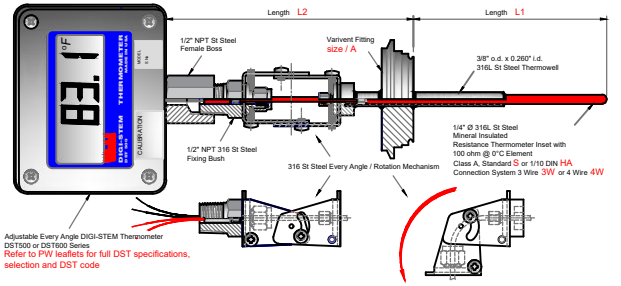

To Order specify - PW.2032 / DST Type / Mounting & size / L1 / L2 / S or HA / 3 or 4 Wire / Fixed Point Calibration if required

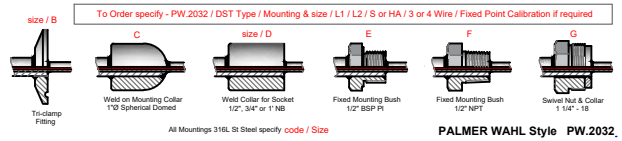

All Mountings 316L St Steel specify code / Size

PALMER WAHL Style PW.2032

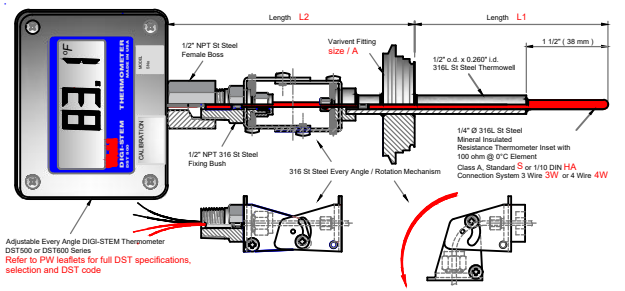

To Order specify - PW.2033 / DST Type / Mounting & size / L1 / L2 / S or HA / 3 or 4 Wire / Fixed Point Calibration if required

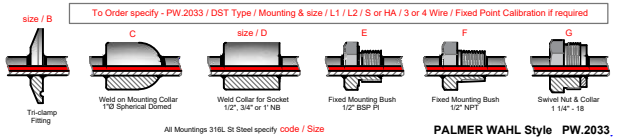

All Mountings 316L St Steel specify code / Size

PALMER WAHL Style PW.2033

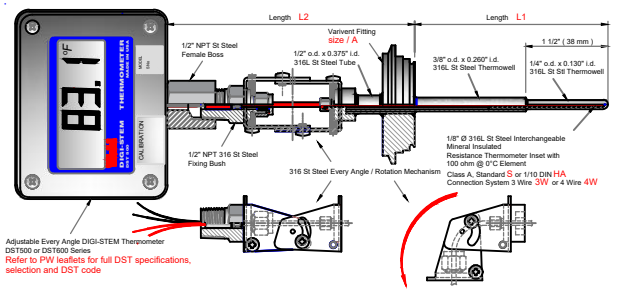

To Order specify - PW.2034 / DST Type / Mounting & size / L1 / L2 / S or HA / 3 or 4 Wire / Fixed Point Calibration if required

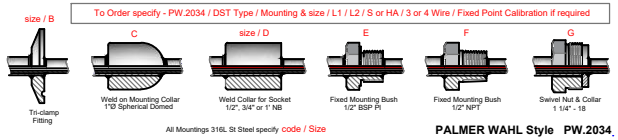

All Mountings 316L St Steel specify code / Size

PALMER WAHL Style PW.2034

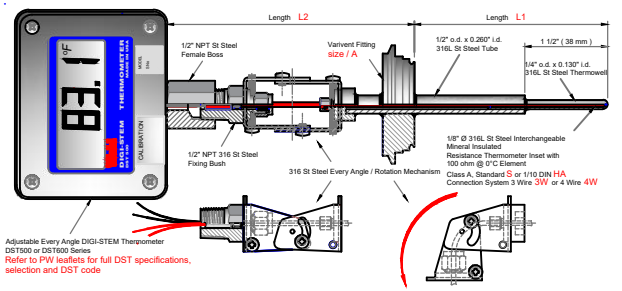

To Order specify - PW.2035 / DST Type / Mounting & size / L1 / L2 / S or HA / 3 or 4 Wire / Fixed Point Calibration if required

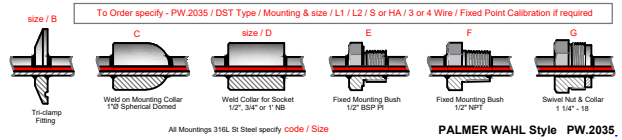

All Mountings 316L St Steel specify code / Size

PALMER WAHL Style PW.2035

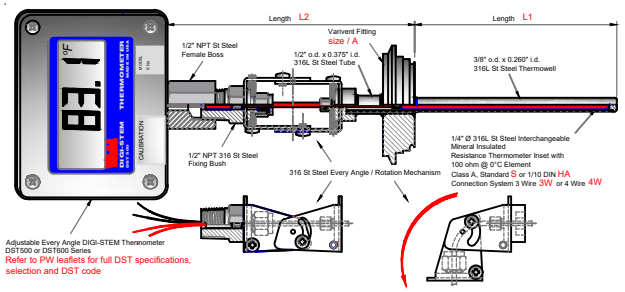

To Order specify - PW.2036 / DST Type / Mounting & size / L1 / L2 / S or HA / 3 or 4 Wire / Fixed Point Calibration if required

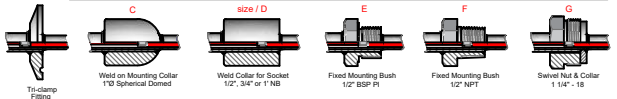

All Mountings 316L St Steel specify code / Size

PALMER WAHL Style PW.2036

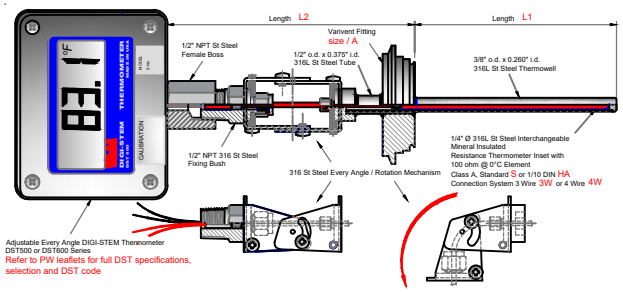

To Order specify - PW.2037 / DST Type / Mounting & size / L1 / L2 / S or HA / 3 or 4 Wire / Fixed Point Calibration if required

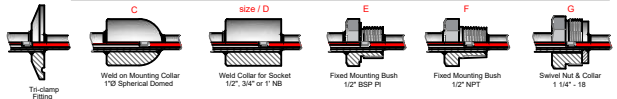

All Mountings 316L St Steel specify code / Size

PALMER WAHL Style PW.2037

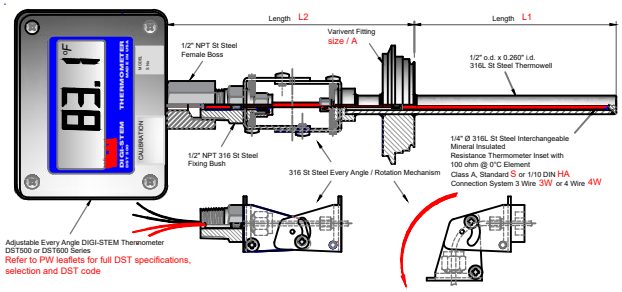

To Order specify - PW.2038 / DST Type / Mounting & size / L1 / L2 / S or HA / 3 or 4 Wire / Fixed Point Calibration if required

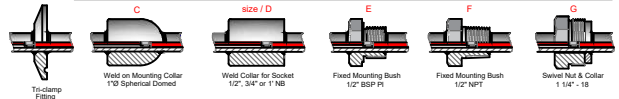

All Mountings 316L St Steel specify code / Size

PALMER WAHL Style PW.2038

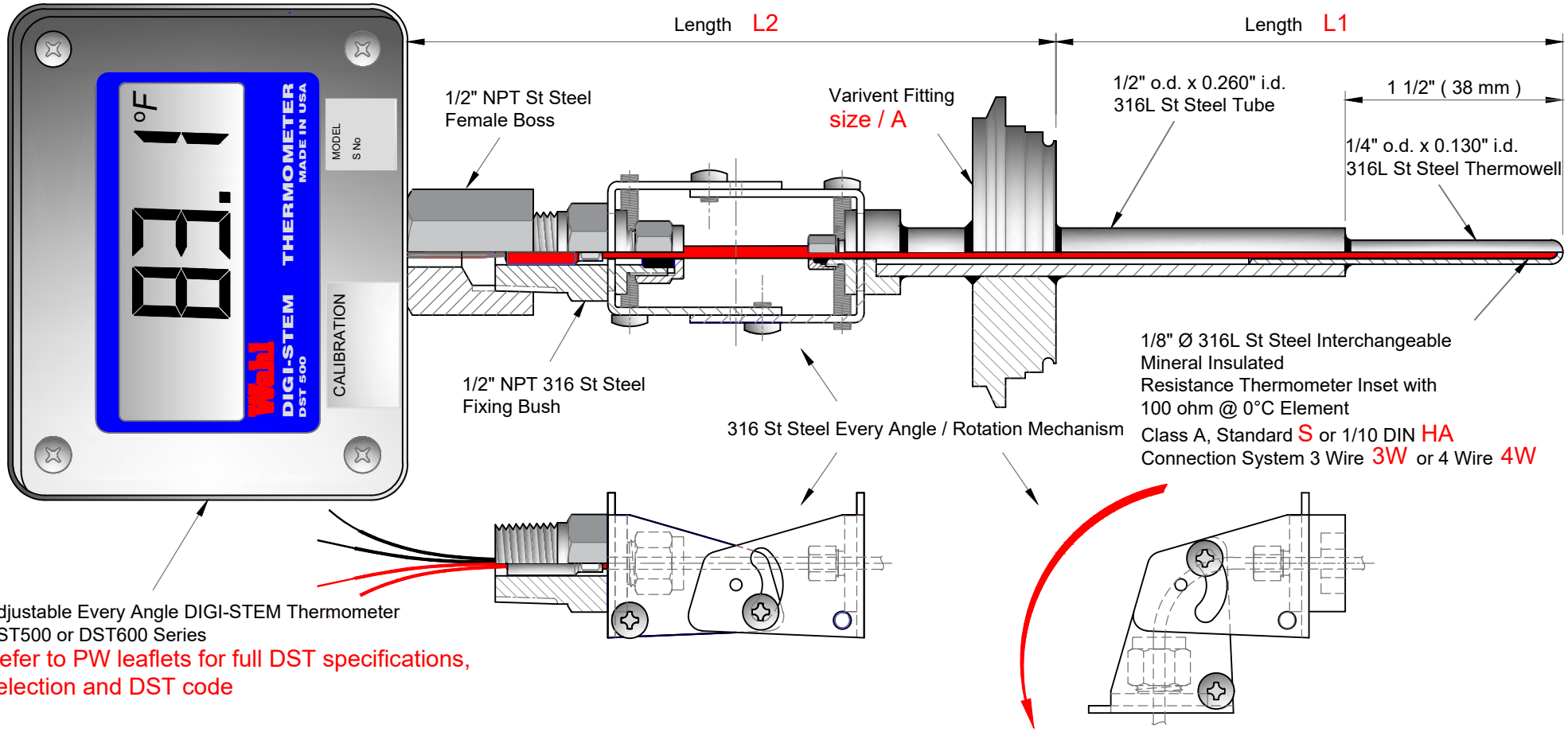

To Order specify - PW.2035 / DST Type / Mounting & size / L1 / L2 / S or HA / 3 or 4 Wire / Fixed Point Calibration if required

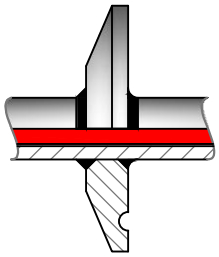

size / B

Tri-clamp
Fitting

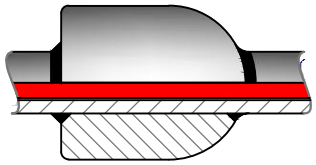

C

Weld on Mounting Collar
1"Ø Spherical Domed

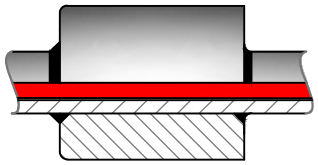

size / D

Weld Collar for Socket
1/2", 3/4" or 1' NB

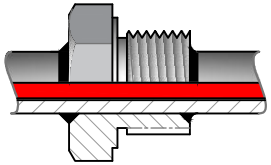

E

Fixed Mounting Bush
1/2" BSP Pl

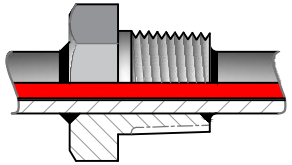

F

Fixed Mounting Bush
1/2" NPT

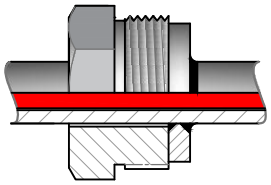

G

Swivel Nut & Collar
1 1/4" - 18

All Mountings 316L St Steel specify code / Size

PALMER WAHL Style PW.2035

REVISIONS			
REV	DESCRIPTION	DATE	CHANGED BY

Meter Range	-50° to 500°F (-45.5° to 260 °C)
System Accuracy	Greater of ±0.3°F / .2°C or ±0.1° reading, over 1-year period (@ Tamb = 23°C) ±5°C
Display	1.0" 4-digit LCD display with icons for °F, °C and Low Battery, Readable up to 30 ft.
Display Resolution	0.1°F/C
Ambient Operating Temperature Range	-40° to + 158°F (-40 to +70°C)
Enclosure	Stainless Steel with Stainless Steel 'H' Frame Lazer Welded to Base
Enclosure Dimensions	5.3" W x 4.3" H x 2.7" D (13.5 x 10.9 x 6.9 cm)
Sensor/Probe	Sensor - 4-wire RTD, R0 =100ohm, Alpha = .00385Ω/Ω/°C with serial ID chip
NIST Calibration	Includes NIST Traceable Certificate of Calibration at 3 points (82.2/104/121.1°C) Certificate Included

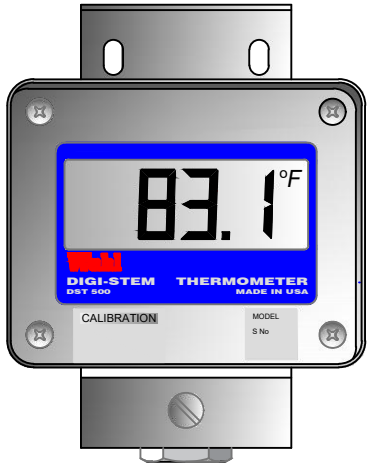

Front View
Fixing Bracket

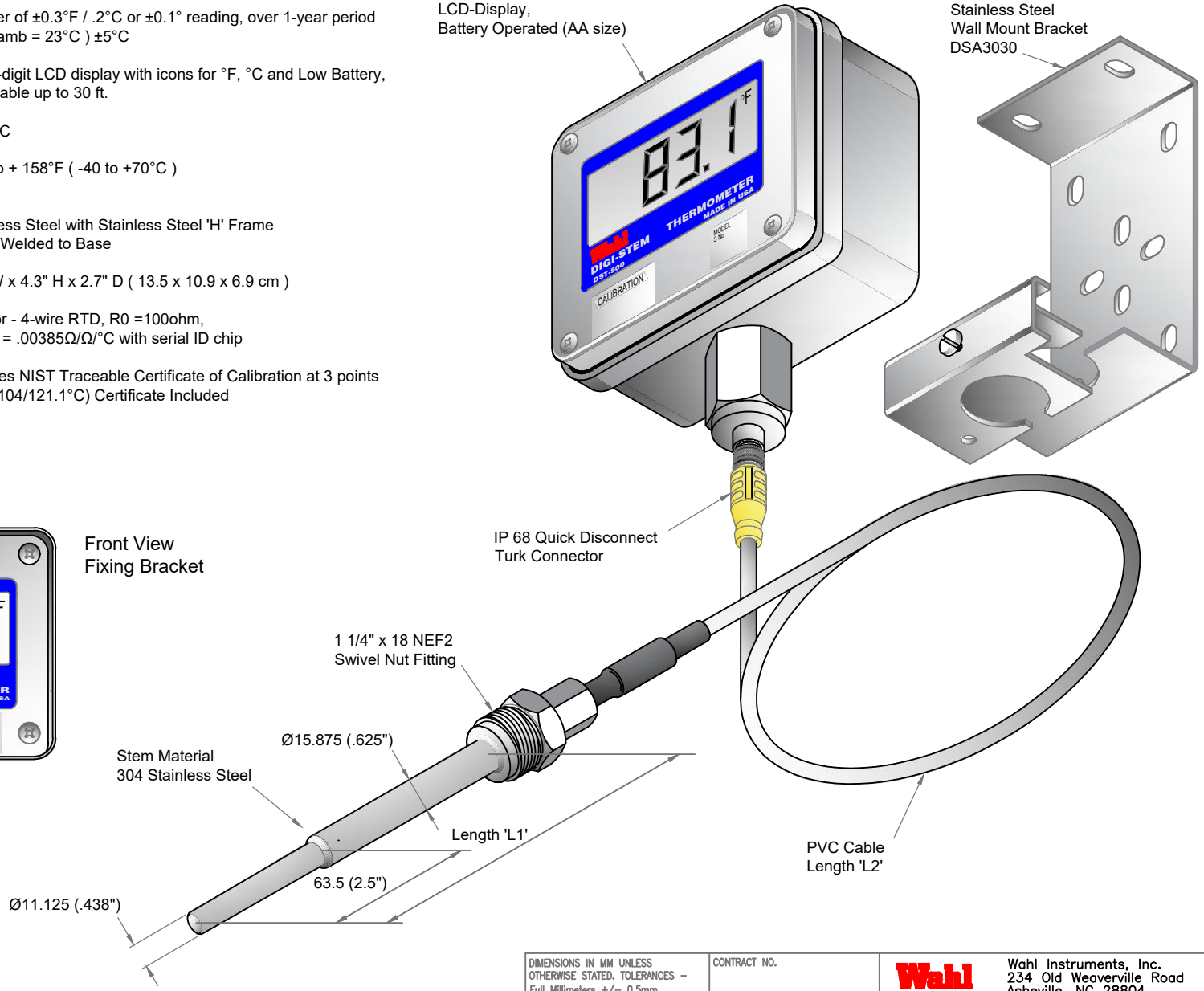

DIMENSIONS IN MM UNLESS OTHERWISE STATED. TOLERANCES – Full Millimeters +/– 0.5mm One Decimal Place +/– 0.15mm Two Decimal Places +/– 0.025mm	CONTRACT NO.		Wahl Instruments, Inc. 234 Old Weaverville Road Asheville, NC 28804
	APPROVALS	DATE	Remote Digi-Stem Thermometer
MATERIAL	DRAWN Lynn Blount	2.1.17	
	CHECKED MJB	2.1.17	SIZE / CAGE CODE / DRAWING NO. PW-1101 / REV
FINISH	ISSUED		
DO NOT SCALE DRAWING			SCALE / SHEET OF

REVISIONS			
REV	DESCRIPTION	DATE	CHANGED BY

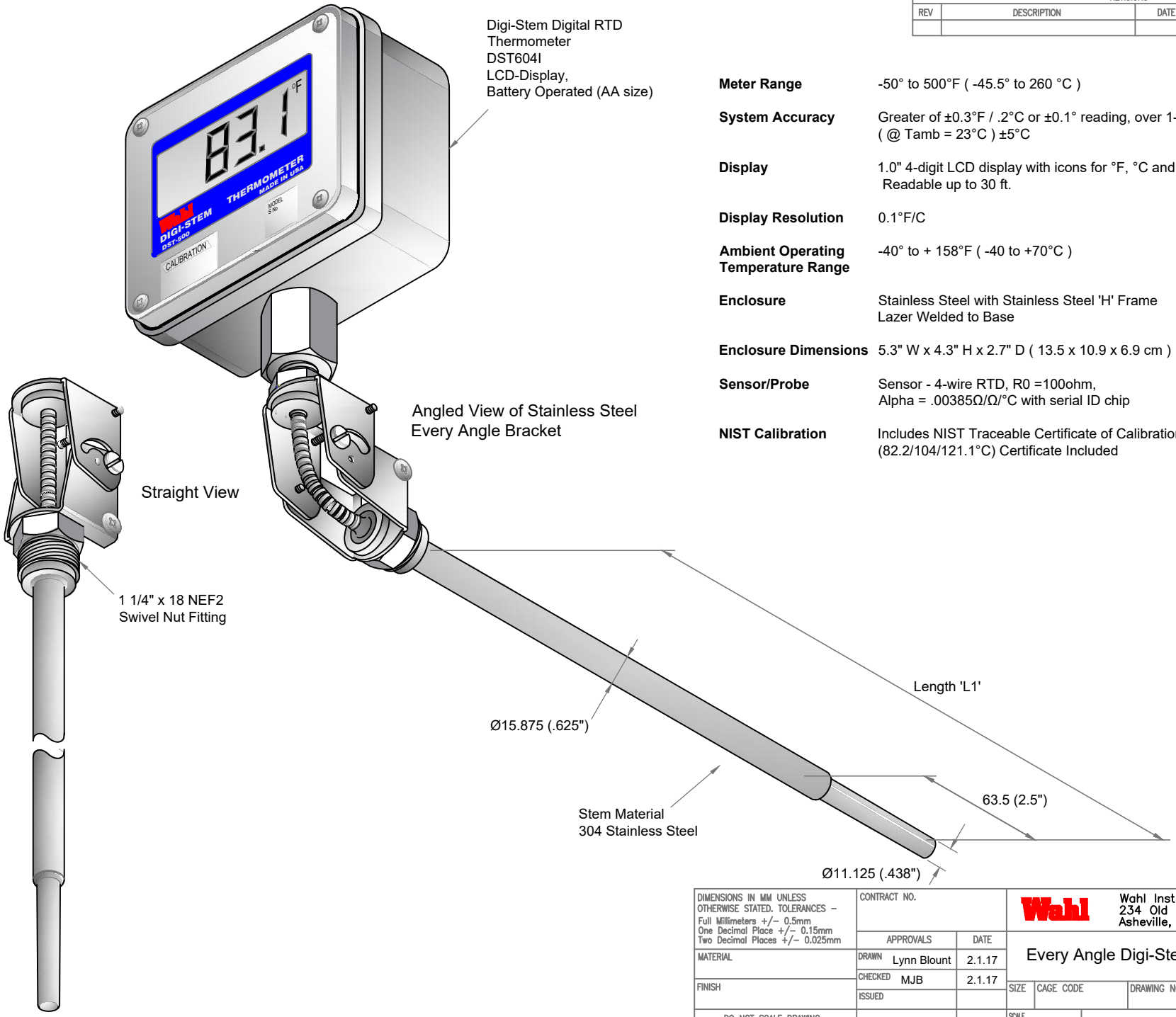

Meter Range	-50° to 500°F (-45.5° to 260 °C)
System Accuracy	Greater of ±0.3°F / .2°C or ±0.1° reading, over 1-year period (@ Tamb = 23°C) ±5°C
Display	1.0" 4-digit LCD display with icons for °F, °C and Low Battery, Readable up to 30 ft.
Display Resolution	0.1°F/C
Ambient Operating Temperature Range	-40° to + 158°F (-40 to +70°C)
Enclosure	Stainless Steel with Stainless Steel 'H' Frame Lazer Welded to Base
Enclosure Dimensions	5.3" W x 4.3" H x 2.7" D (13.5 x 10.9 x 6.9 cm)
Sensor/Probe	Sensor - 4-wire RTD, R0 =100ohm, Alpha = .00385Ω/Ω/°C with serial ID chip
NIST Calibration	Includes NIST Traceable Certificate of Calibration at 3 points (82.2/104/121.1°C) Certificate Included

DIMENSIONS IN MM UNLESS OTHERWISE STATED. TOLERANCES – Full Millimeters +/– 0.5mm One Decimal Place +/– 0.15mm Two Decimal Places +/– 0.025mm	CONTRACT NO.		Wahl Instruments, Inc. 234 Old Weaverville Road Asheville, NC 28804
	APPROVALS	DATE	Every Angle Digi-Stem Thermometer
MATERIAL	DRAWN Lynn Blount	2.1.17	
	CHECKED MJB	2.1.17	SIZE / CAGE CODE / DRAWING NO. PW-1102 / REV
FINISH	ISSUED		
DO NOT SCALE DRAWING			SCALE / SHEET OF

REVISIONS			
REV	DESCRIPTION	DATE	CHANGED BY

Palmer Wahl Compact Transmitter IP67 Protection with Thermoplastic Moulded Body and Stainless Steel Fittings is perfect for areas where traditional Head Mounted Transmitters are too large and space is limited.
PW offers a large range of Cables and Sensor Designs for attaching to the Compact Transmitter, Model No: PW-1206

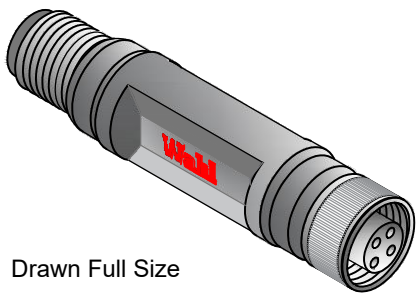

Drawn Full Size

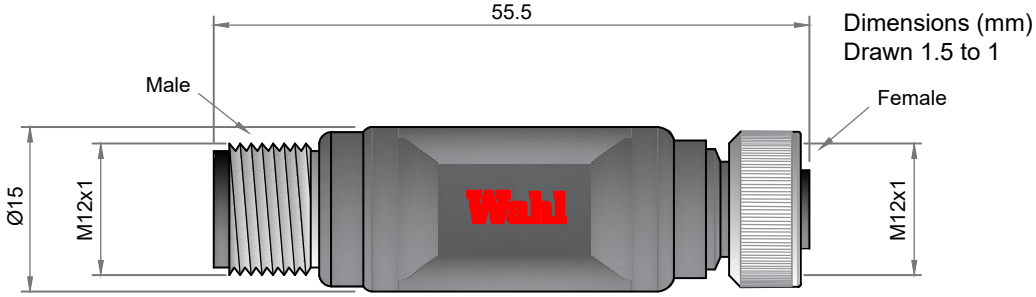

Dimensions (mm)
Drawn 1.5 to 1

TECHNICAL DETAILS

Input	3-wire Pt100 IEC 60751, TC: 3.85 x 10^{-3}
Sensor current	- 0.5 mA
Output	Analog, 4-20 mA, temperature linear
Response time (90%)	< 10 ms
Permissible load	750 Ω @ 24 VDC
Measuring range	PC - configurable
Measuring range limits	- 50 to + 800°C
Zero limits	- 50°C to + 50°C
Minimum span	50°C or 20°C
Sensor error	Max. ± 1 % of span (2 points compensation)
Compensation	
Sensor Break	Selectable, Upscale (>21.0 mA) or downscale (<3.6 mA) action
Sensor short circuit	Fixed, downscale (<3.6 mA) action
Ambient temperature	- 40 to + 85°C (storage and operation)
Humidity	0 to 100 %RH
Vibrations	Acc. to IEC 60068 - 2 - 6, test Fc, 10 - 2000 Hz, 10g
EMC	Acc. to IEC 61326-1
Basic accuracy	Max. of ± 0.2°C or 0.2 % of span
Temperature influence	Max. of ± 0.01°C per °C or ± 0.01 % of span per °C
Long-term stability	± 0.1 % of span per year
Power supply	7.5 to 32 VDC, polarity protected
Material	Thermoplastic material*
Weight	16 g
Protection	IP67
Process connection	M12 x 1 4-pin

Input (female) connection

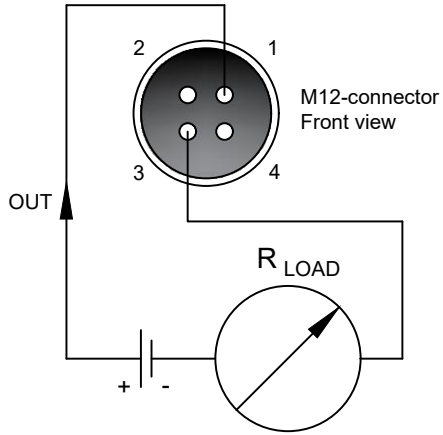

Input (male) connection

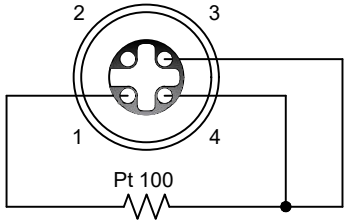

Transmitter Measuring Range : - 50 to + 800 °C
The configuration is easily done before the installation with the user friendly ConSoft software and it can be Re-Configured without stopping / removal from the process.
*Hygienic requirement on materials and articles intended for contact with foodstuffs according to Regulation (EC) 1935/2004

DIMENSIONS IN MM UNLESS OTHERWISE STATED. TOLERANCES – Full Millimeters +/– 0.5mm, One Decimal Place +/– 0.15mm, Two Decimal Places +/– 0.025mm	CONTRACT NO.		Wahl Instruments, Inc. 234 Old Weaverville Road Asheville, NC 28804
	APPROVALS	DATE	Compact Transmitter
MATERIAL	DRAWN Lynn Blount	3.3.17	
	CHECKED MJB	3.3.17	SIZE / CAGE CODE / DRAWING NO. PW-1206 / REV
FINISH	ISSUED		
DO NOT SCALE DRAWING			SCALE / SHEET OF

REVISIONS			
REV	DESCRIPTION	DATE	CHANGED BY

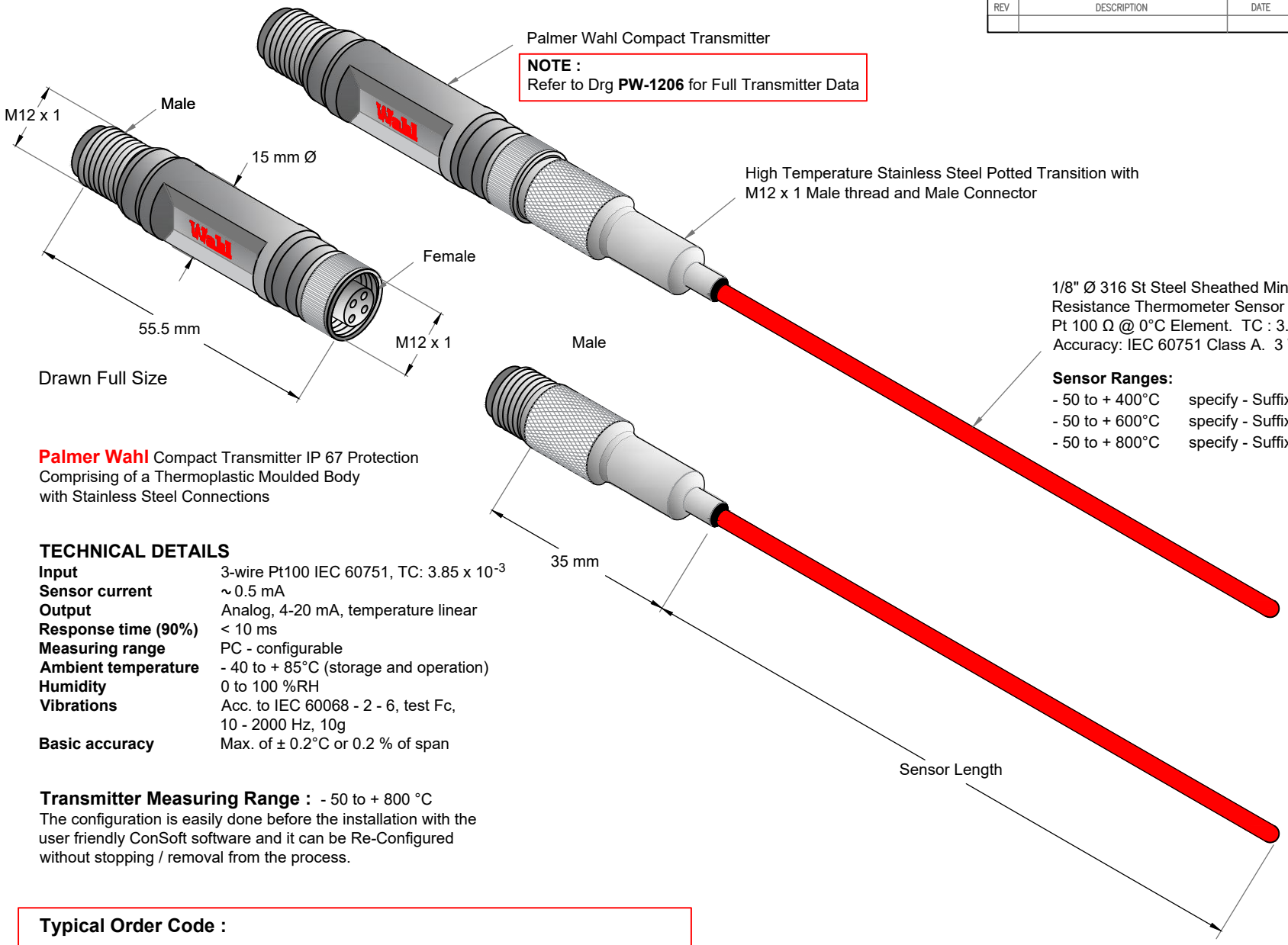

Drawn Full Size

Palmer Wahl Compact Transmitter IP 67 Protection
Comprising of a Thermoplastic Moulded Body
with Stainless Steel Connections

TECHNICAL DETAILS

Input	3-wire Pt100 IEC 60751, TC: 3.85 x 10^{-3}
Sensor current	~ 0.5 mA
Output	Analog, 4-20 mA, temperature linear
Response time (90%)	< 10 ms
Measuring range	PC - configurable
Ambient temperature	- 40 to + 85°C (storage and operation)
Humidity	0 to 100 %RH
Vibrations	Acc. to IEC 60068 - 2 - 6, test Fc, 10 - 2000 Hz, 10g
Basic accuracy	Max. of ± 0.2°C or 0.2 % of span

Transmitter Measuring Range : - 50 to + 800 °C
The configuration is easily done before the installation with the user friendly ConSoft software and it can be Re-Configured without stopping / removal from the process.

Typical Order Code :

PW-1207	/	12	/	0 - 100°C	/	4
Transmitter & 1/8"Ø Sensor	/	12" Length	/	Transmitter Range	/	Sensor Range - 50 to + 400°C

To Order Sensor Only : Denote **S.O.** for Transmitter Range

DIMENSIONS IN MM UNLESS OTHERWISE STATED. TOLERANCES – Full Millimeters +/– 0.5mm One Decimal Place +/– 0.15mm Two Decimal Places +/– 0.025mm	CONTRACT NO.		Wahl Instruments, Inc. 234 Old Weaverville Road Asheville, NC 28804
	APPROVALS	DATE	Compact Transmitter & 1/8" Sensor
MATERIAL	DRAWN Lynn Blount	2.22.17	
	CHECKED MJB	2.22.17	SIZE / CAGE CODE / DRAWING NO. PW-1207 / REV
FINISH	ISSUED		
DO NOT SCALE DRAWING			SCALE / SHEET OF

REVISIONS			
REV	DESCRIPTION	DATE	CHANGED BY

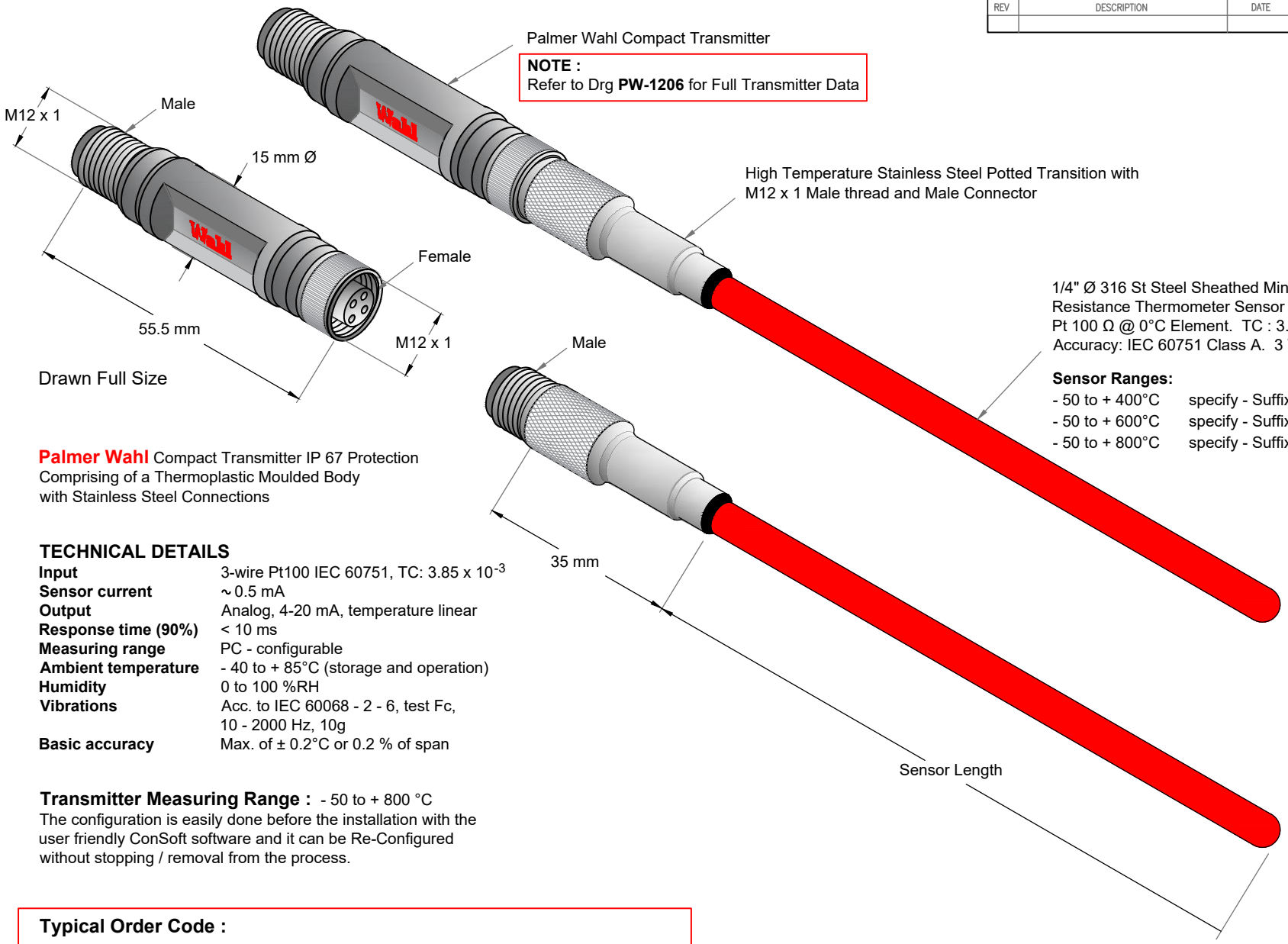

Drawn Full Size

1/4" Ø 316 St Steel Sheathed Mineral Insulated Resistance Thermometer Sensor housing a Pt 100 Ω @ 0°C Element. TC : 3.85 x 10^{-3}
Accuracy: IEC 60751 Class A. 3 Wire System

Sensor Ranges:

- 50 to + 400°C specify - Suffix / **4**
- 50 to + 600°C specify - Suffix / **6**
- 50 to + 800°C specify - Suffix / **8**

Palmer Wahl Compact Transmitter IP 67 Protection
Comprising of a Thermoplastic Moulded Body
with Stainless Steel Connections

TECHNICAL DETAILS

Input	3-wire Pt100 IEC 60751, TC: 3.85 x 10^{-3}
Sensor current	~ 0.5 mA
Output	Analog, 4-20 mA, temperature linear
Response time (90%)	< 10 ms
Measuring range	PC - configurable
Ambient temperature	- 40 to + 85°C (storage and operation)
Humidity	0 to 100 %RH
Vibrations	Acc. to IEC 60068 - 2 - 6, test Fc, 10 - 2000 Hz, 10g
Basic accuracy	Max. of ± 0.2°C or 0.2 % of span

Transmitter Measuring Range : - 50 to + 800 °C
The configuration is easily done before the installation with the user friendly ConSoft software and it can be Re-Configured without stopping / removal from the process.

Typical Order Code :

PW-1208	/	12	/	0 - 100°C	/	4
Transmitter & 1/4"Ø Sensor	/	12" Length	/	Transmitter Range	/	Sensor Range - 50 to + 400°C

To Order Sensor Only : Denote **S.O.** for Transmitter Range

DIMENSIONS IN MM UNLESS OTHERWISE STATED. TOLERANCES – Full Millimeters +/– 0.5mm One Decimal Place +/– 0.15mm Two Decimal Places +/– 0.025mm	CONTRACT NO.		Wahl Instruments, Inc. 234 Old Weaverville Road Asheville, NC 28804
	APPROVALS	DATE	Compact Transmitter & 1/4" Sensor
MATERIAL	DRAWN Lynn Blount	2.22.17	
	CHECKED MJB	2.22.17	SIZE / CAGE CODE / DRAWING NO. PW-1208 / REV
FINISH	ISSUED		
DO NOT SCALE DRAWING			SCALE / SHEET OF

REVISIONS			
REV	DESCRIPTION	DATE	CHANGED BY

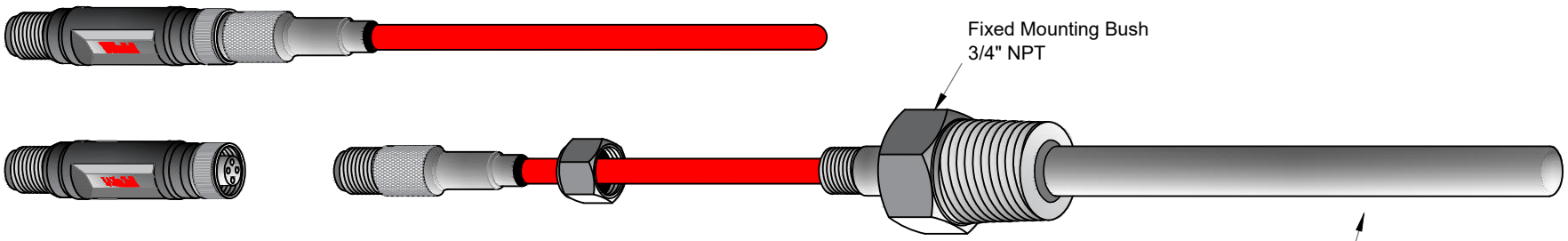

Palmer Wahl Compact Transmitter IP 67 Protection
Comprising of a Thermoplastic Moulded Body
with Stainless Steel Connections

Refer to Drg **PW-1206** for Full Transmitter Data

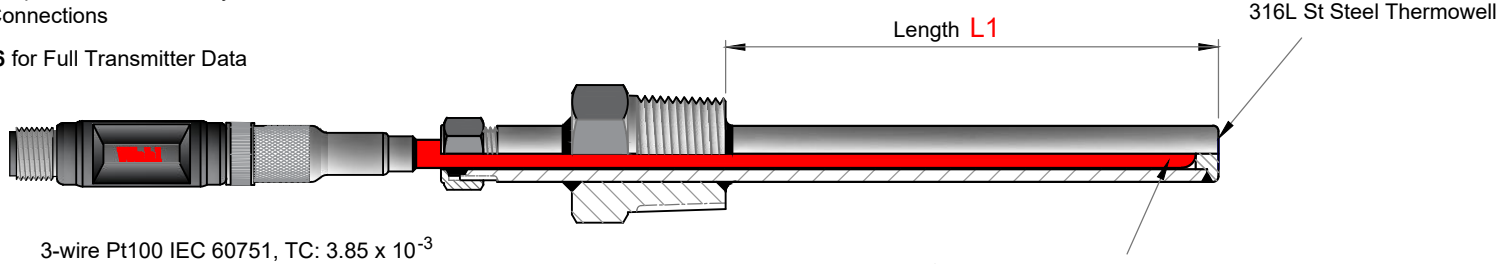

Technical Details

Input	3-wire Pt100 IEC 60751, TC: 3.85 x 10^{-3}
Sensor current	~ 0.5 mA
Output	Analog, 4-20 mA, temperature linear
Response time (90%)	< 10 ms
Measuring range	PC - configurable
Ambient temperature	- 40 to + 85°C (storage and operation)
Humidity	0 to 100 %RH
Vibrations	Acc. to IEC 60068 - 2 - 6, test Fc, 10 - 2000 Hz, 10g
Basic accuracy	Max. of ± 0.2°C or 0.2 % of span

Transmitter Measuring Range : - 50 to + 800 °C
The configuration is easily done before the installation with the user friendly ConSoft software and it can be Re-Configured without stopping / removal from the process.

Sensor Ranges:

- 50 to + 400°C	specify - Suffix / **4**
- 50 to + 600°C	specify - Suffix / **6**
- 50 to + 800°C	specify - Suffix / **8**

To Order Specify - PW.1229 / L1 / TX Range / Sensor Range / Fixed Point Calibration, if required

Compact TX PALMER WAHL Style PW.1229

DIMENSIONS IN MM UNLESS OTHERWISE STATED. TOLERANCES – Full Millimeters +/– 0.5mm One Decimal Place +/– 0.15mm Two Decimal Places +/– 0.025mm	CONTRACT NO.		Wahl Instruments, Inc. 234 Old Weaverville Road Asheville, NC 28804
	APPROVALS	DATE	Compact Transmitter Resistance Thermometer Assembly
MATERIAL	DRAWN Lynn Blount	3.10.17	
	CHECKED MJB	3.10.17	SIZE / CAGE CODE / DRAWING NO. PW-1229 / REV
FINISH	ISSUED		
DO NOT SCALE DRAWING			SCALE / SHEET OF

REVISIONS			
REV	DESCRIPTION	DATE	CHANGED BY

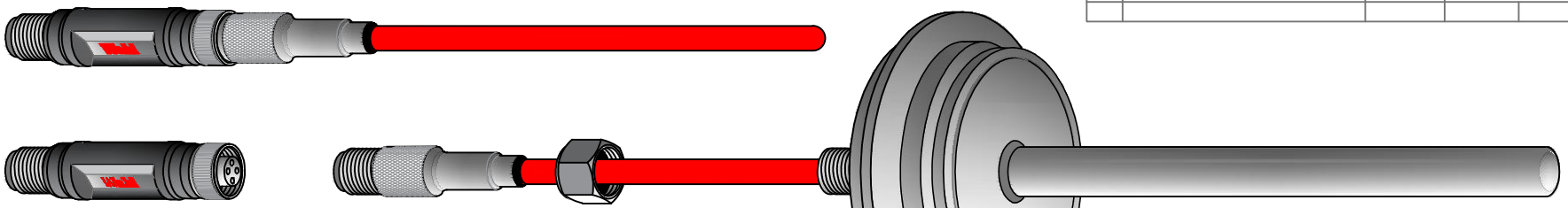

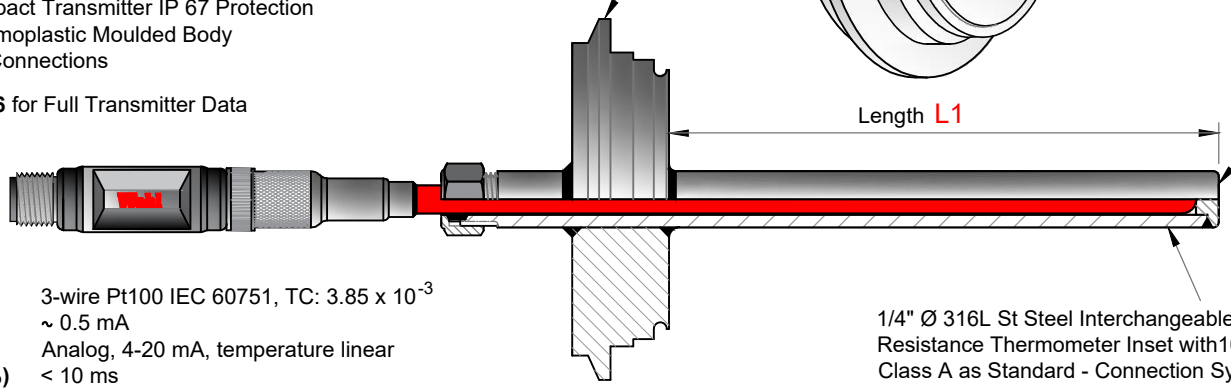

Palmer Wahl Compact Transmitter IP 67 Protection
Comprising of a Thermoplastic Moulded Body
with Stainless Steel Connections

Refer to Drg **PW-1206** for Full Transmitter Data

Technical Details

Input	3-wire Pt100 IEC 60751, TC: 3.85 x 10^{-3}
Sensor current	~ 0.5 mA
Output	Analog, 4-20 mA, temperature linear
Response time (90%)	< 10 ms
Measuring range	PC - configurable
Ambient temperature	- 40 to + 85°C (storage and operation)
Humidity	0 to 100 %RH
Vibrations	Acc. to IEC 60068 - 2 - 6, test Fc, 10 - 2000 Hz, 10g
Basic accuracy	Max. of ± 0.2°C or 0.2 % of span

Transmitter Measuring Range : - 50 to + 800 °C
The configuration is easily done before the installation with the user friendly ConSoft software and it can be Re-Configured without stopping / removal from the process.

Sensor Ranges:

- 50 to + 400°C	specify - Suffix / **4**
- 50 to + 600°C	specify - Suffix / **6**
- 50 to + 800°C	specify - Suffix / **8**

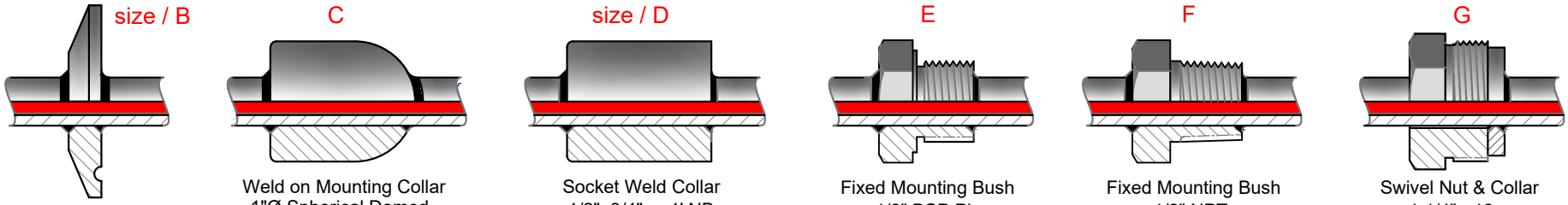

Tri-Clamp Fitting

Weld on Mounting Collar
1"Ø Spherical Domed

Socket Weld Collar
1/2", 3/4" or 1' NB

Fixed Mounting Bush
1/2" BSP Pl

Fixed Mounting Bush
1/2" NPT

Swivel Nut & Collar
1 1/4" - 18

All Mountings 316L St Steel . specify code / size

Compact TX PALMER WAHL Style PW.1228

To Order Specify - PW.1228 / Mounting & size / L1 / TX Range /
Sensor Range / Fixed Point Calibration, if required

DIMENSIONS IN MM UNLESS OTHERWISE STATED. TOLERANCES – Full Millimeters +/– 0.5mm, One Decimal Place +/– 0.15mm, Two Decimal Places +/– 0.025mm	CONTRACT NO.	Wahl Instruments, Inc. 234 Old Weaverville Road Asheville, NC 28804	
	APPROVALS / DATE	Compact Transmitter Resistance Thermometer Assembly	
MATERIAL	DRAWN Lynn Blount 3.10.17		
	CHECKED MJB 3.10.17	SIZE / CAGE CODE / DRAWING NO. PW-1228	REV
FINISH	ISSUED		
DO NOT SCALE DRAWING		SCALE / SHEET OF	

REVISIONS			
REV	DESCRIPTION	DATE	CHANGED BY

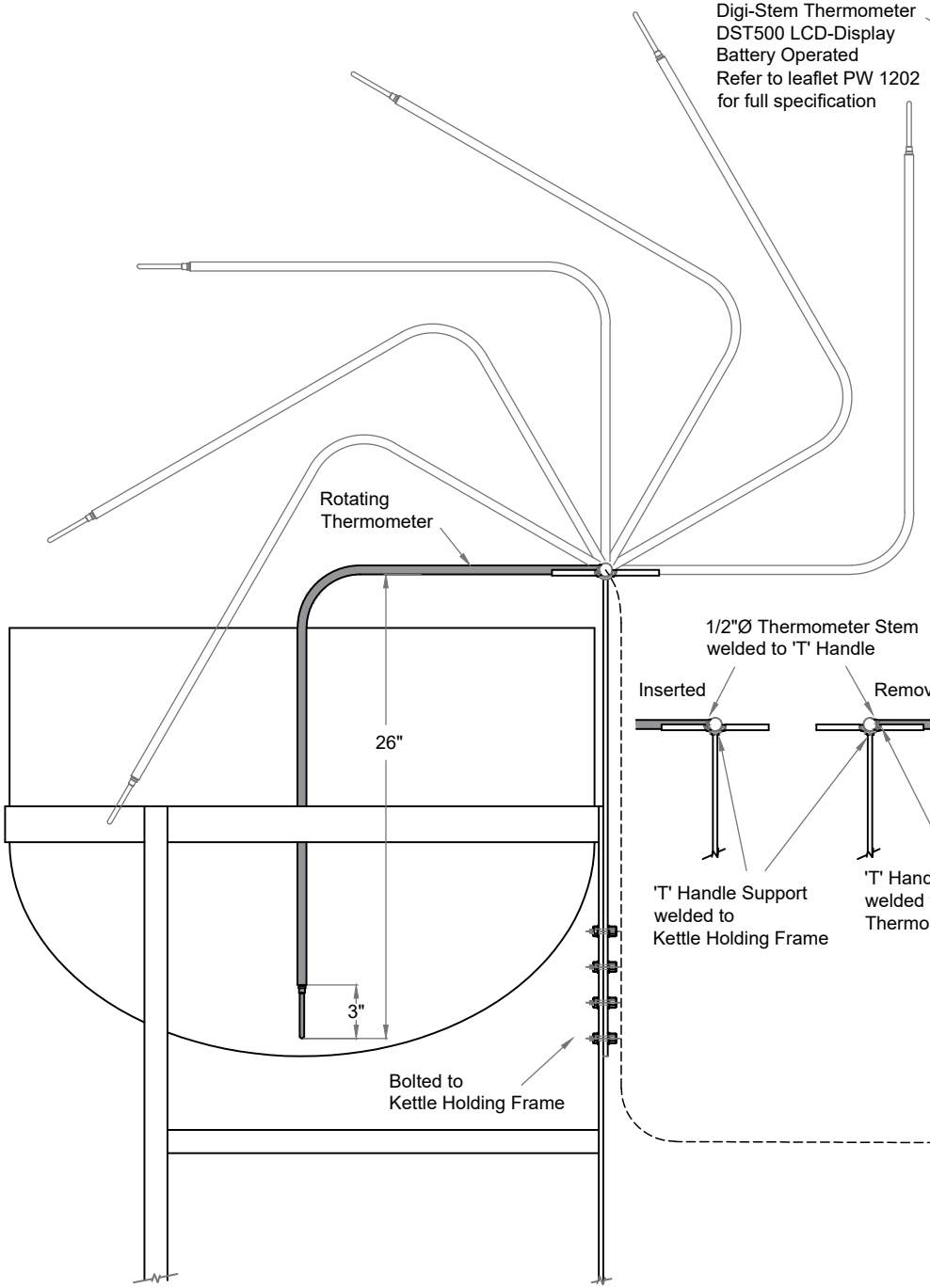

Digi-Stem Thermometer
DST500 LCD-Display
Battery Operated
Refer to leaflet PW 1202
for full specification

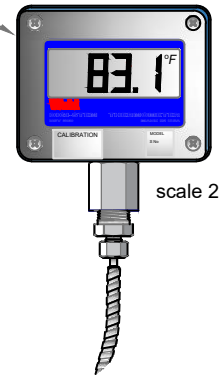

scale 2 : 1

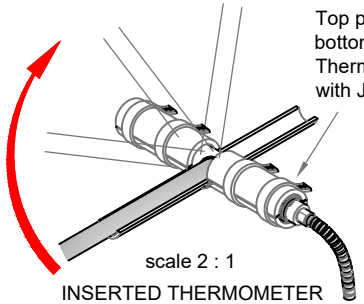

Top pipe strapped onto
bottom pipe to enable
Thermometer to be turned
with Jubilee Clips

scale 2 : 1
INSERTED THERMOMETER
rests onto support

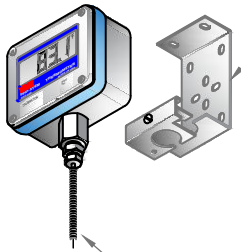

OPTIONAL
Stainless Steel DSA3030
Wall Mount Bracket

3/16" i.d.
St Steel Conduit

1/2"Ø Thermometer Stem
welded to 'T' Handle

Inserted

Removed

'T' Handle Support
welded to
Kettle Holding Frame

'T' Handle Support
welded to
Thermometer Support

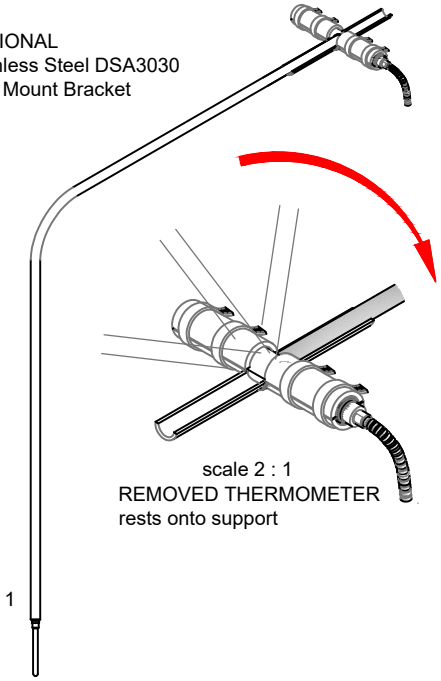

scale 2 : 1
REMOVED THERMOMETER
rests onto support

scale 2 : 1

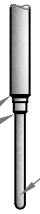

Weld
machined &
Polished

1/4" Ø Internal Mineral Insulated
Resistance Thermometer
Sensor Basic Resistance :
100 ohms @ 0°C - 138.5 ohms @ 100°C
TC 0.00385 / Class A

DIMENSIONS IN MM UNLESS OTHERWISE STATED. TOLERANCES – Full Millimeters +/– 0.5mm, One Decimal Place +/– 0.15mm, Two Decimal Places +/– 0.025mm	CONTRACT NO.		Wahl Instruments, Inc. 234 Old Weaverville Road Asheville, NC 28804
	APPROVALS	DATE	Kettle Rotating Thermometer
MATERIAL	DRAWN Lynn Blount	3.28.17	
	CHECKED MJB	3.28.17	SIZE / CAGE CODE / DRAWING NO. PW-1224 / REV
FINISH	ISSUED		
DO NOT SCALE DRAWING			SCALE / SHEET OF

REVISIONS			
REV	DESCRIPTION	DATE	CHANGED BY

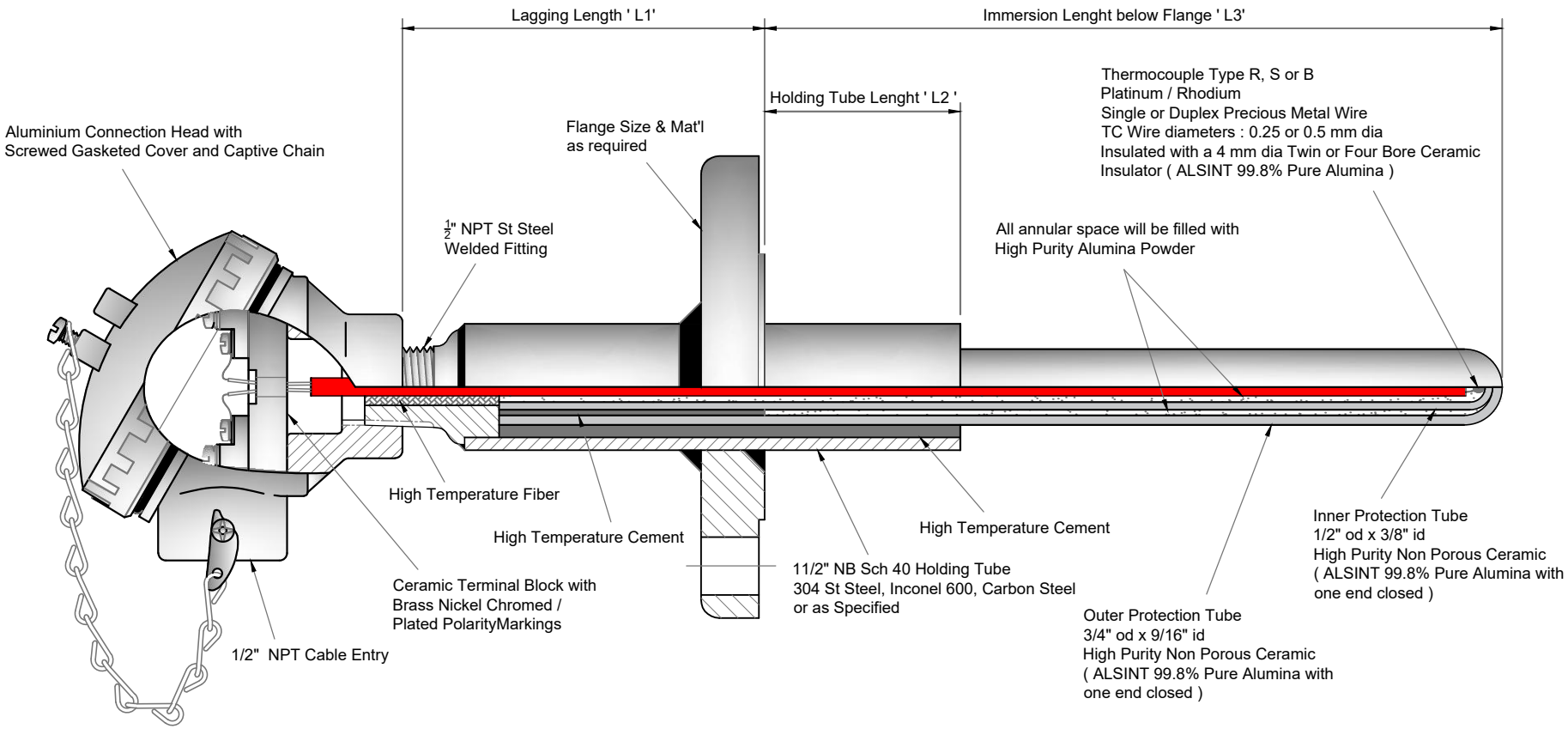

DIMENSIONS IN MM UNLESS OTHERWISE STATED. TOLERANCES – Full Millimeters +/– 0.5mm One Decimal Place +/– 0.15mm Two Decimal Places +/– 0.025mm	CONTRACT NO.		Wahl Instruments, Inc. 234 Old Weaverville Road Asheville, NC 28804
	APPROVALS	DATE	High Temperature T/C Assembly Ceramic Double Thermowell
MATERIAL	DRAWN Lynn Blount	3.15.16	
	CHECKED MJB	3.15.16	SIZE / CAGE CODE / DRAWING NO. PW-1009 / REV
FINISH	ISSUED		
DO NOT SCALE DRAWING			SCALE / SHEET OF

REVISIONS			
REV	DESCRIPTION	DATE	CHANGED BY

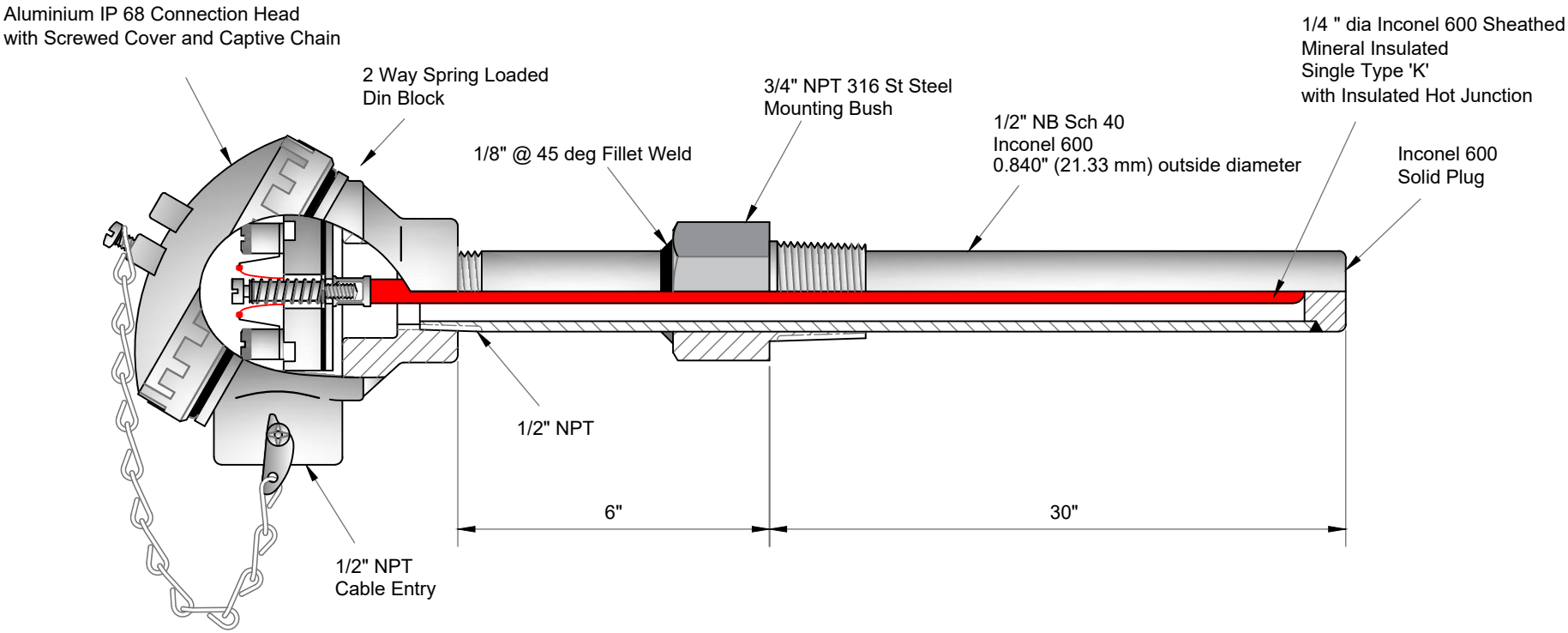

DIMENSIONS IN MM UNLESS OTHERWISE STATED. TOLERANCES – Full Millimeters +/– 0.5mm One Decimal Place +/– 0.15mm Two Decimal Places +/– 0.025mm	CONTRACT NO.		Wahl Instruments, Inc. 234 Old Weaverville Road Asheville, NC 28804
	APPROVALS	DATE	High Temperature Tubular T/C Asssembly
MATERIAL	DRAWN Lynn Blount	2.22.16	
	CHECKED MJB	2.22.16	
FINISH	ISSUED		SIZE / CAGE CODE / DRAWING NO. PW-1001 / REV
DO NOT SCALE DRAWING			SCALE / SHEET OF

REVISIONS			
REV	DESCRIPTION	DATE	CHANGED BY

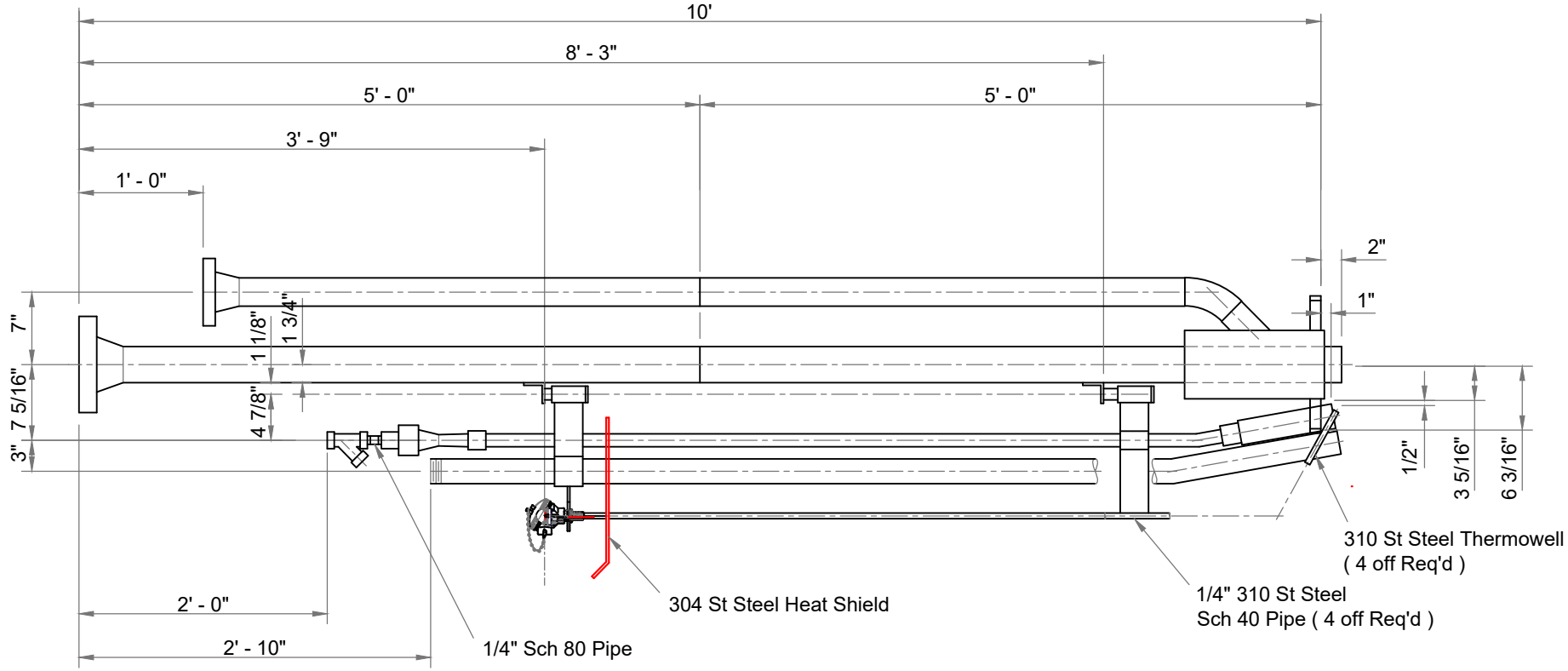

DIMENSIONS IN MM UNLESS OTHERWISE STATED. TOLERANCES – Full Millimeters +/– 0.5mm One Decimal Place +/– 0.15mm Two Decimal Places +/– 0.025mm	CONTRACT NO.		Wahl Instruments, Inc. 234 Old Weaverville Road Asheville, NC 28804
	APPROVALS	DATE	Duplex Thermocouple Assembly
MATERIAL	DRAWN Lynn Blount	11.11.16	
	CHECKED MJB	11.11.16	SIZE / CAGE CODE / DRAWING NO. PW-1078 / REV
FINISH	ISSUED		
DO NOT SCALE DRAWING			SCALE / SHEET 1 OF 2

REVISIONS			
REV	DESCRIPTION	DATE	CHANGED BY

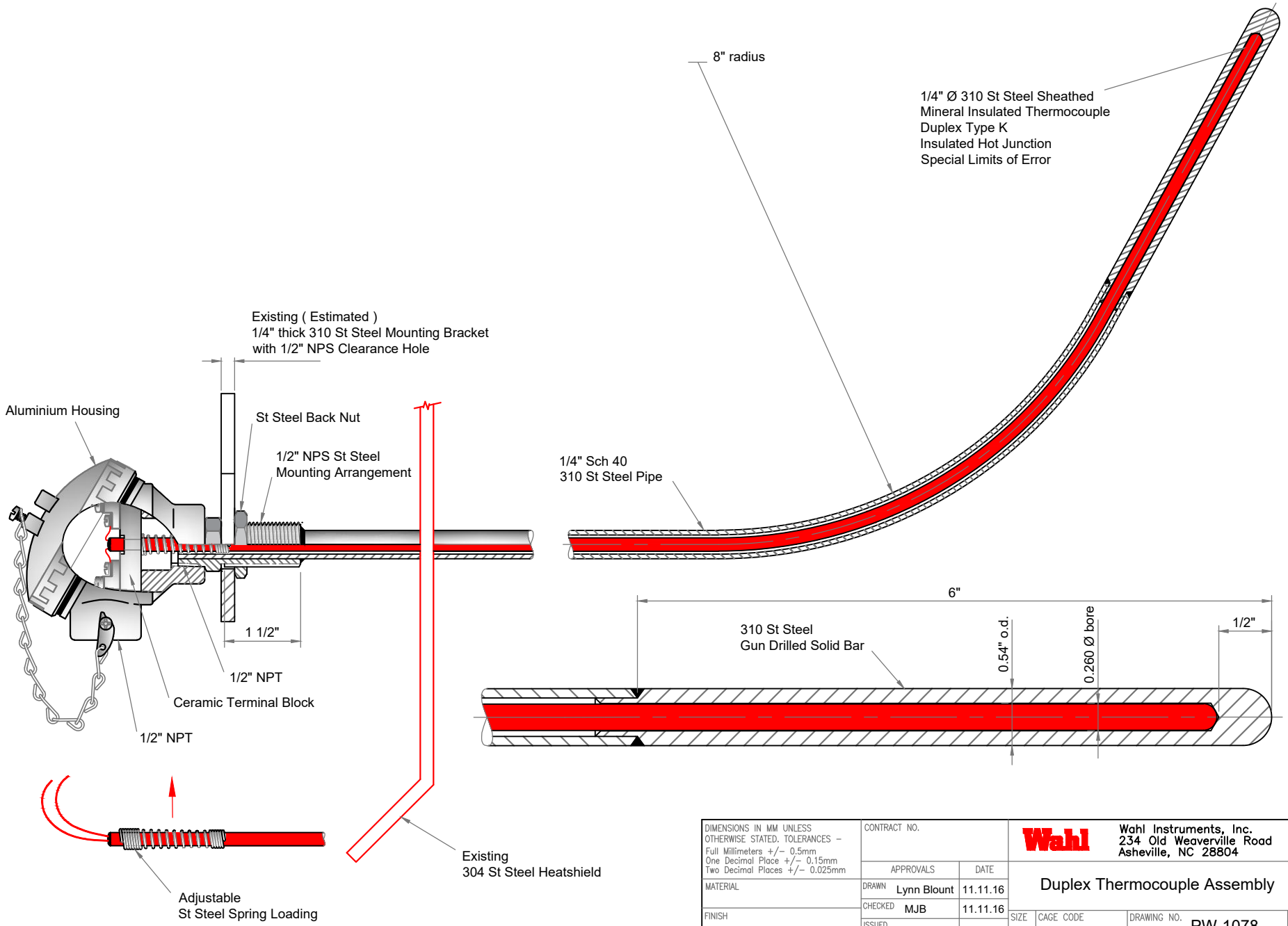

DIMENSIONS IN MM UNLESS OTHERWISE STATED. TOLERANCES – Full Millimeters +/– 0.5mm One Decimal Place +/– 0.15mm Two Decimal Places +/– 0.025mm	CONTRACT NO.		Wahl Instruments, Inc. 234 Old Weaverville Road Asheville, NC 28804
	APPROVALS	DATE	Duplex Thermocouple Assembly
MATERIAL	DRAWN Lynn Blount	11.11.16	
	CHECKED MJB	11.11.16	SIZE / CAGE CODE / DRAWING NO. PW-1078 / REV
FINISH	ISSUED		
DO NOT SCALE DRAWING			SCALE / SHEET 2 OF 2

REVISIONS			
REV	DESCRIPTION	DATE	CHANGED BY

All Carbon Steel
Black Epoxy Painted

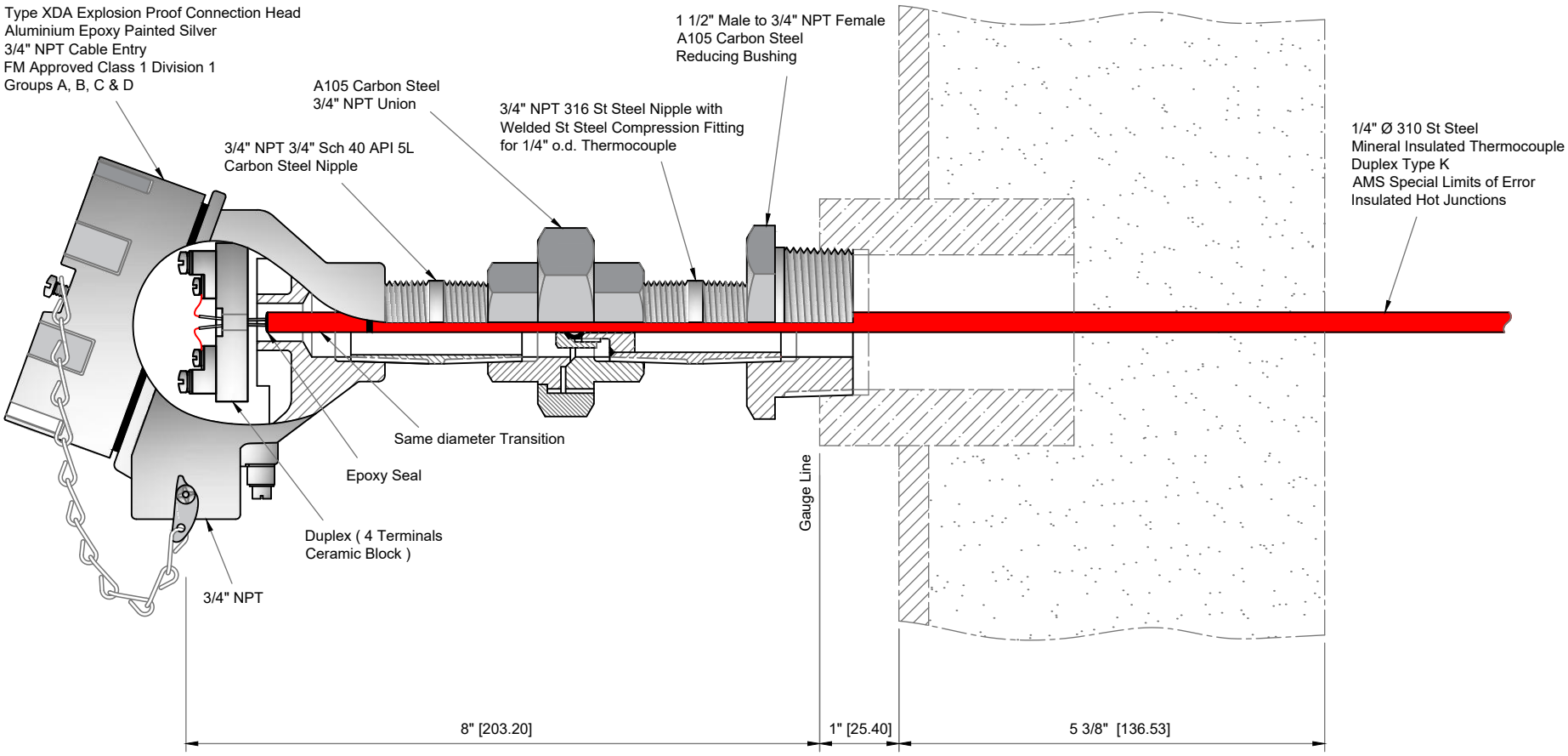

Connection Head Fixing and Sealing Details

DIMENSIONS IN MM UNLESS OTHERWISE STATED. TOLERANCES – Full Millimeters +/– 0.5mm, One Decimal Place +/– 0.15mm, Two Decimal Places +/– 0.025mm	CONTRACT NO.		Wahl Instruments, Inc. 234 Old Weaverville Road Asheville, NC 28804
	APPROVALS	DATE	Tubeskin Thermocouple with Packed Heat Shield
MATERIAL	DRAWN Lynn Blount	5.3.16	
	CHECKED MJB	5.3.16	SIZE / CAGE CODE / DRAWING NO. PW-1027 / REV
FINISH	ISSUED		
DO NOT SCALE DRAWING			SCALE / SHEET 1 OF 2

REVISIONS			
REV	DESCRIPTION	DATE	CHANGED BY

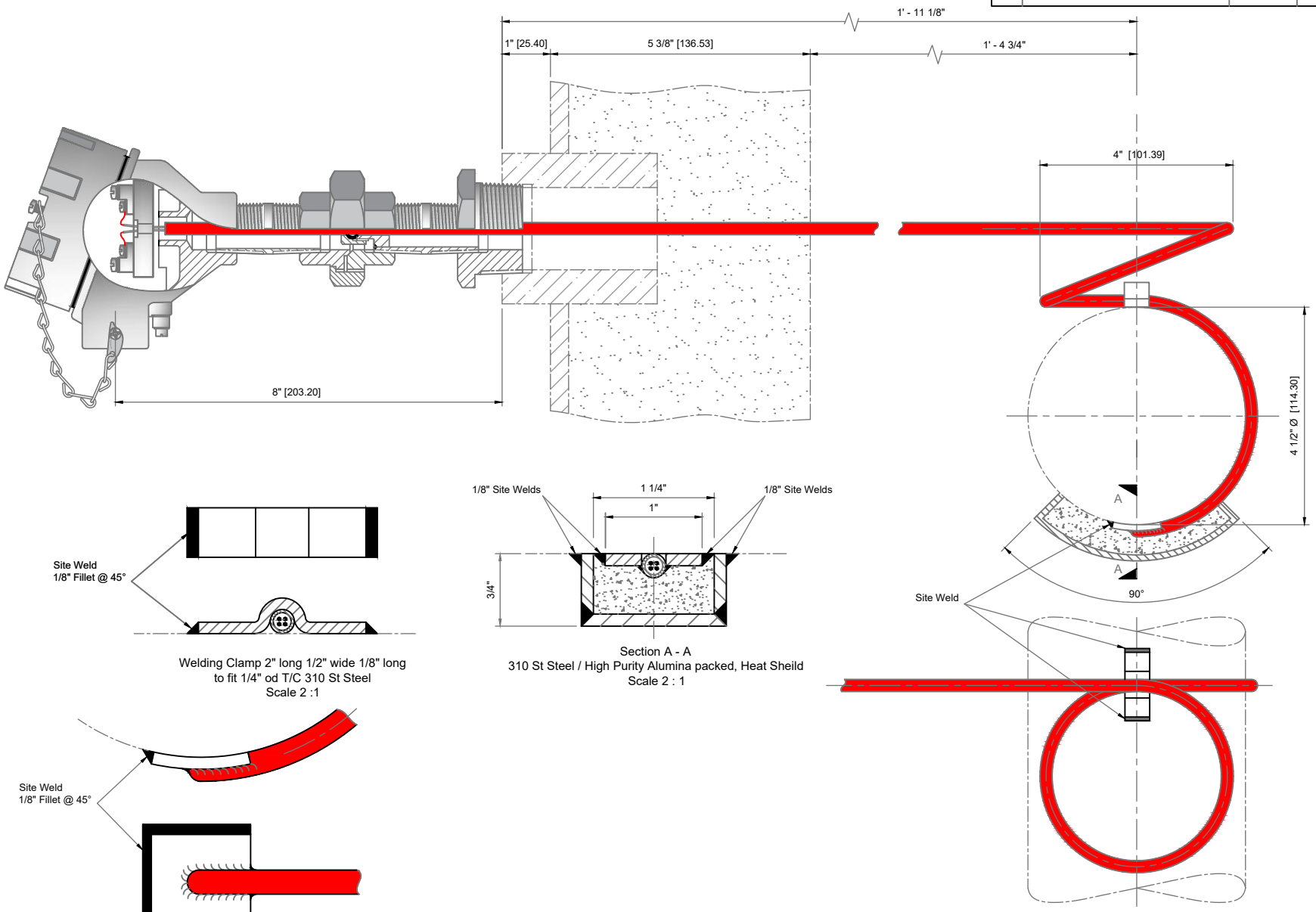

Welding Clamp 2" long 1/2" wide 1/8" long
to fit 1/4" od T/C 310 St Steel
Scale 2 :1

Section A - A
310 St Steel / High Purity Alumina packed, Heat Sheild
Scale 2 : 1

Weld Pad Detail
1" x 1" x1/8" 310 St Steel
radiused toSuit 4 1/2" Pipe
Scale 2 : 1

DIMENSIONS IN MM UNLESS OTHERWISE STATED. TOLERANCES – Full Millimeters +/– 0.5mm One Decimal Place +/– 0.15mm Two Decimal Places +/– 0.025mm	CONTRACT NO.		Wahl Instruments, Inc. 234 Old Weaverville Road Asheville, NC 28804
	APPROVALS	DATE	Tubeskin Thermocouple with Packed Heat Shield
MATERIAL	DRAWN Lynn Blount	5.3.16	
	CHECKED MJB	5.3.16	SIZE / CAGE CODE / DRAWING NO. PW-1027 / REV
FINISH	ISSUED		
DO NOT SCALE DRAWING			SCALE / SHEET 2 OF 2

REVISIONS			
REV	DESCRIPTION	DATE	CHANGED BY

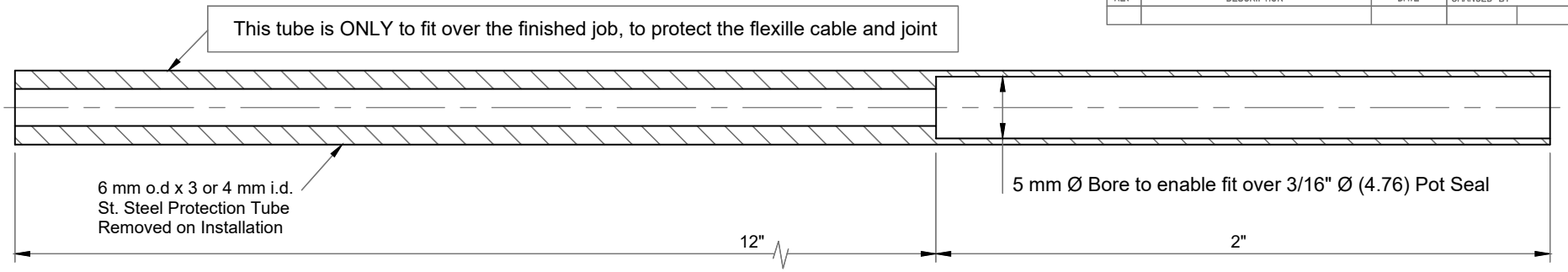

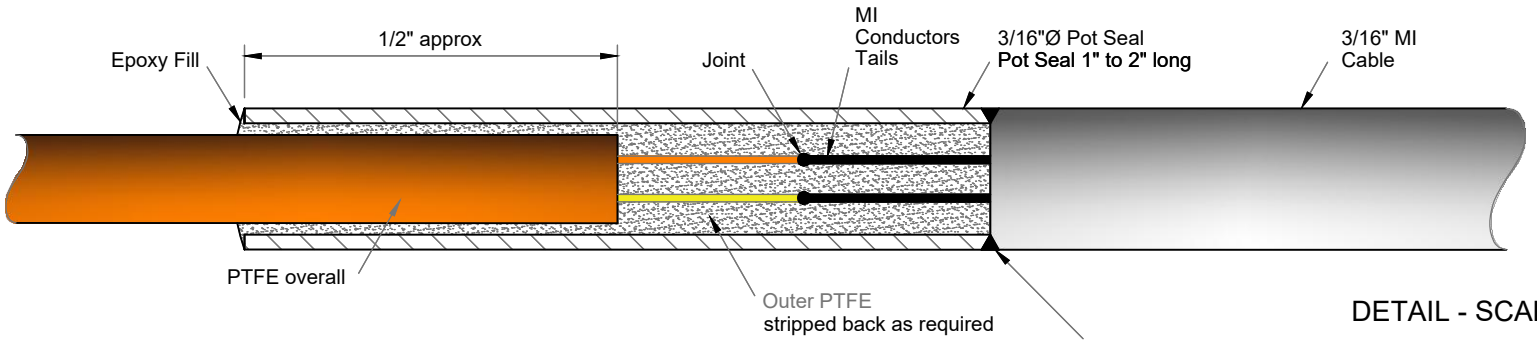

DETAIL - SCALE 2:1

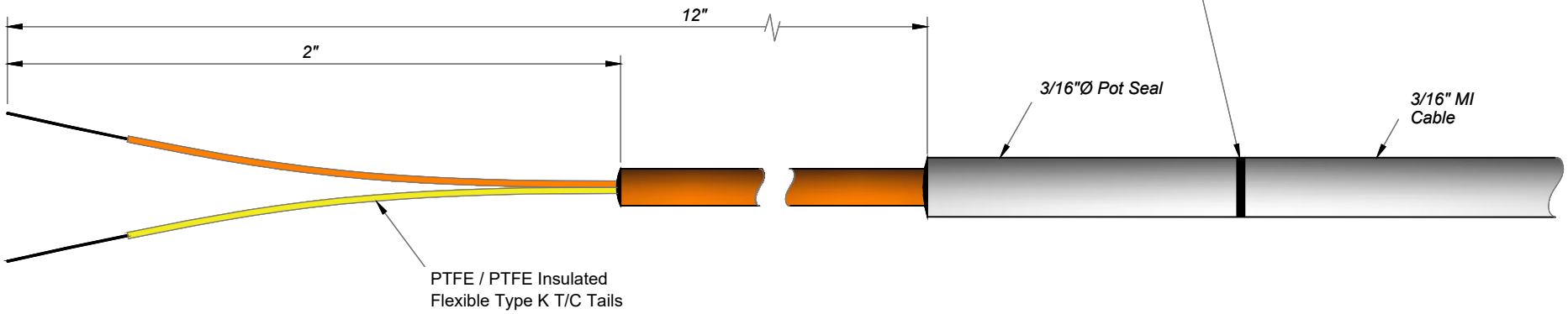

DIMENSIONS IN MM UNLESS OTHERWISE STATED. TOLERANCES – Full Millimeters +/– 0.5mm One Decimal Place +/– 0.15mm Two Decimal Places +/– 0.025mm	CONTRACT NO.		Wahl Instruments, Inc. 234 Old Weaverville Road Asheville, NC 28804
	APPROVALS	DATE	Cold End Termination of Tubeskin Thermocouples
MATERIAL	DRAWN Lynn Blount	5.31.16	
	CHECKED MJB	5.31.16	SIZE / CAGE CODE / DRAWING NO. MD-1011 A / REV
FINISH	ISSUED		
DO NOT SCALE DRAWING			SCALE / SHEET OF

REVISIONS			
REV	DESCRIPTION	DATE	CHANGED BY

View on 'A'

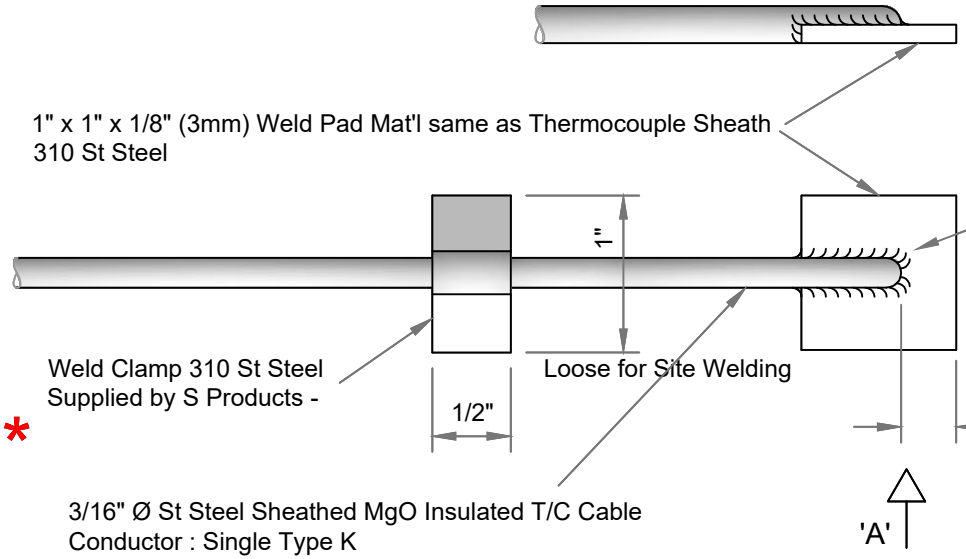

Scale 1 : 1

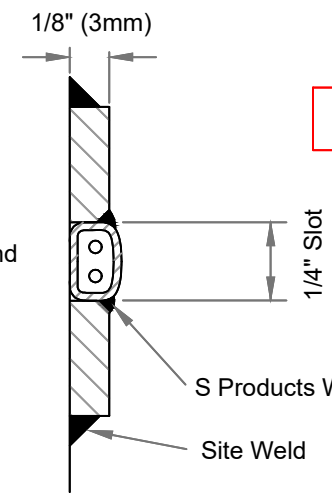

X - X

Scale 2 : 1

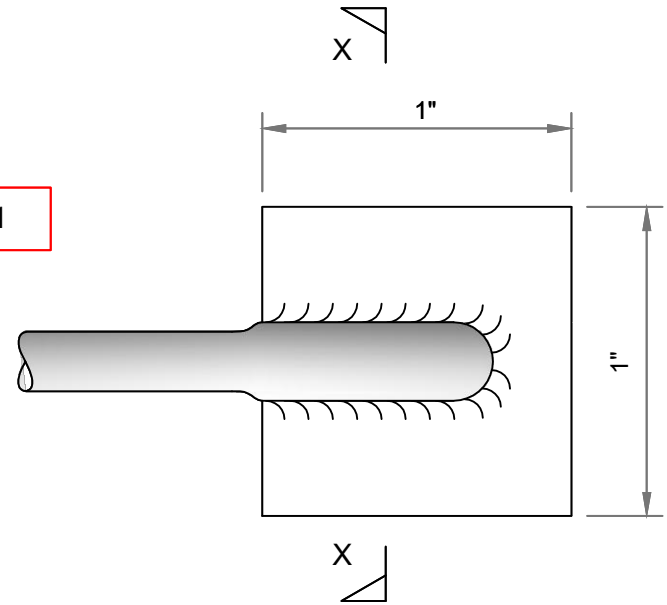

* NOTE
Flatten 3/16"Ø Thermocouple at end
to Fill 1/4" wide slot

DIMENSIONS IN MM UNLESS OTHERWISE STATED. TOLERANCES – Full Millimeters +/– 0.5mm, One Decimal Place +/– 0.15mm, Two Decimal Places +/– 0.025mm	CONTRACT NO.	Wahl	Wahl Instruments, Inc. 234 Old Weaverville Road Asheville, NC 28804
	APPROVALS / DATE		Cold End Termination Detail of Tubeskin Thermocouples
MATERIAL	DRAWN Lynn Blount 6.3.16		
	CHECKED MJB 6.3.16		SIZE / CAGE CODE / DRAWING NO. MD SP-1011 B / REV
FINISH	ISSUED		
DO NOT SCALE DRAWING			SCALE / SHEET OF

REVISIONS			
REV	DESCRIPTION	DATE	CHANGED BY

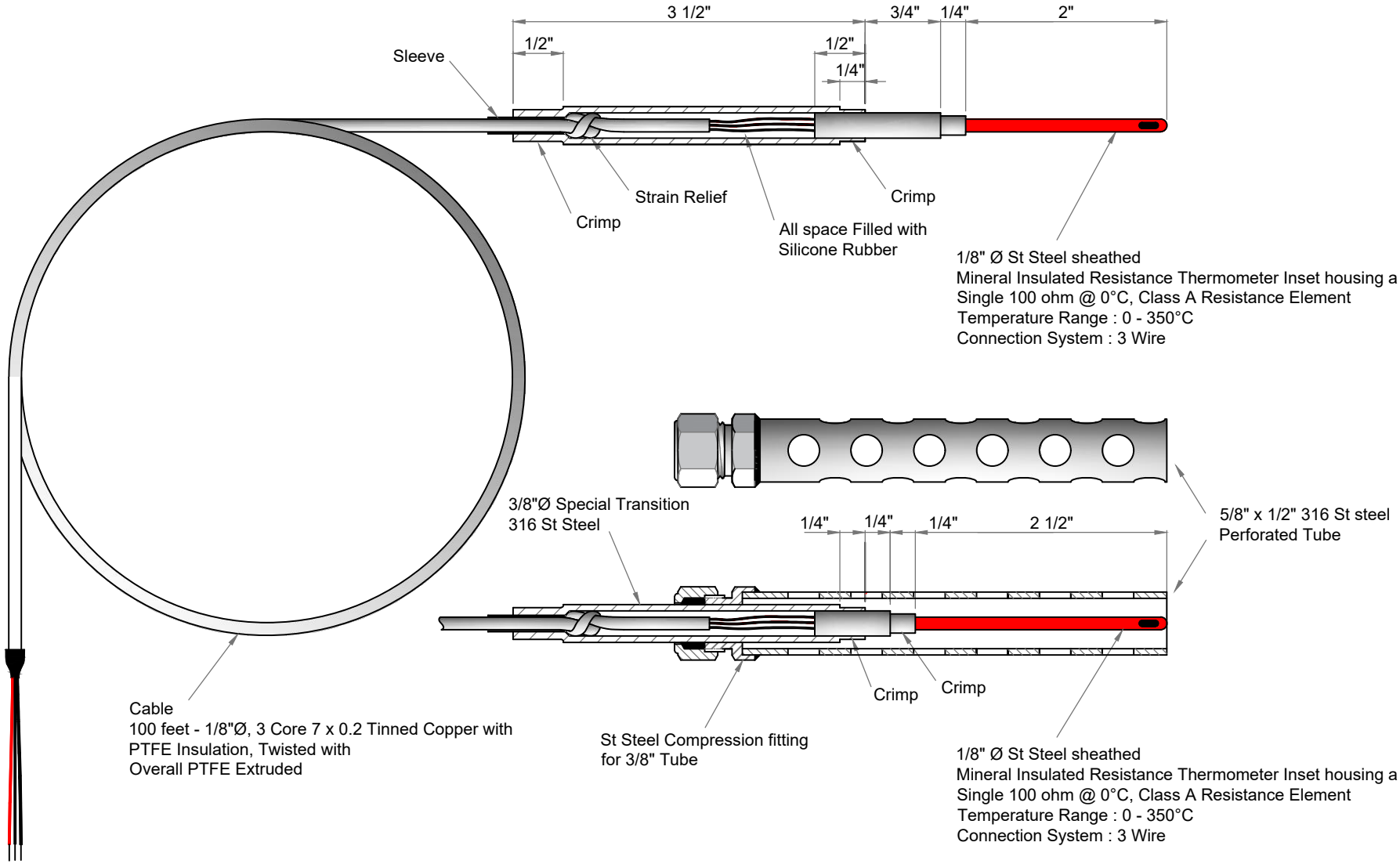

DIMENSIONS IN MM UNLESS OTHERWISE STATED. TOLERANCES – Full Millimeters +/– 0.5mm One Decimal Place +/– 0.15mm Two Decimal Places +/– 0.025mm	CONTRACT NO.		Wahl Instruments, Inc. 234 Old Weaverville Road Asheville, NC 28804
	APPROVALS	DATE	Fast Response Deep Well Resistance Thermometer Assembly
MATERIAL	DRAWN Lynn Blount	11.7.16	
	CHECKED MJB	11.7.16	SIZE / CAGE CODE / DRAWING NO. PW-1077 / REV
FINISH	ISSUED		
DO NOT SCALE DRAWING			SCALE / SHEET OF

REVISIONS			
REV	DESCRIPTION	DATE	CHANGED BY

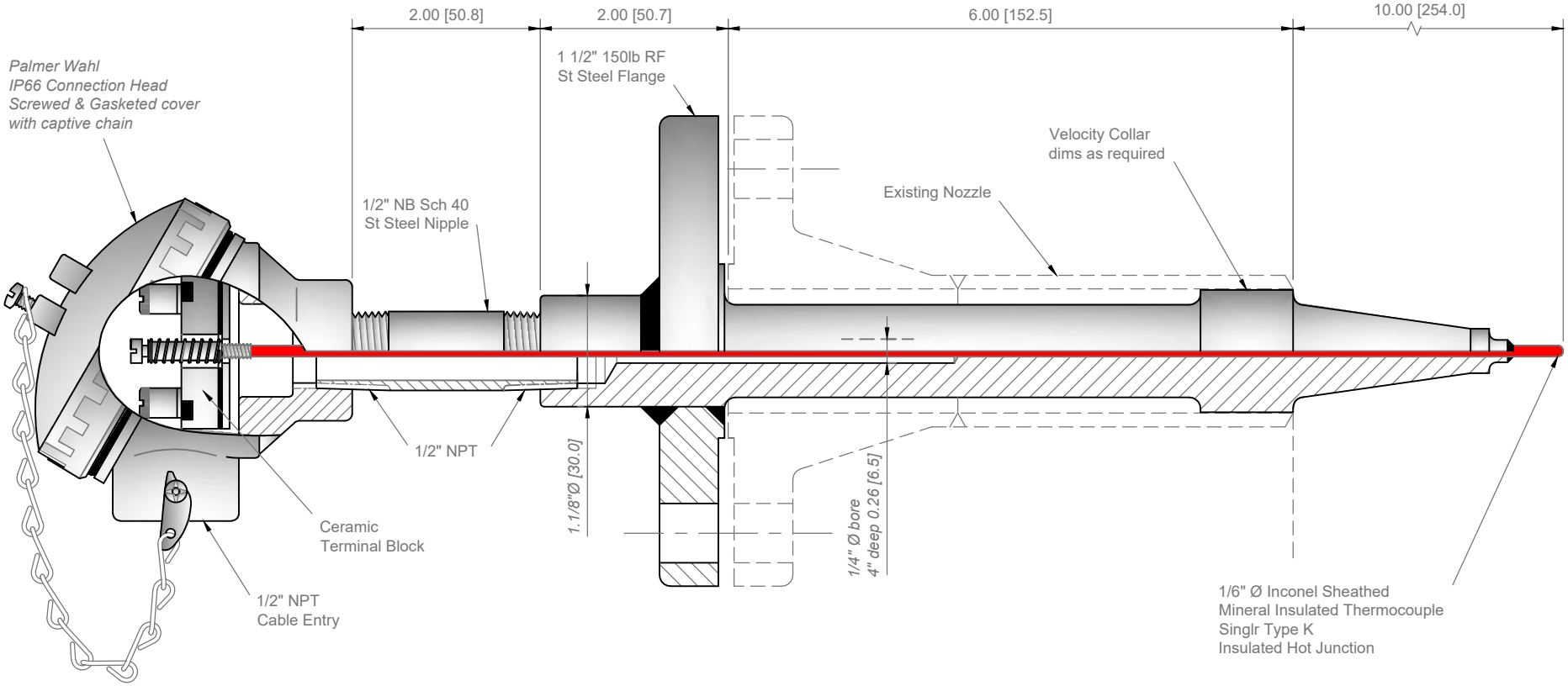

DIMENSIONS IN MM UNLESS OTHERWISE STATED. TOLERANCES – Full Millimeters +/– 0.5mm One Decimal Place +/– 0.15mm Two Decimal Places +/– 0.025mm	CONTRACT NO.		Wahl Instruments, Inc. 234 Old Weaverville Road Asheville, NC 28804
	APPROVALS	DATE	Fast Response Thermocouple Assembly
MATERIAL	DRAWN Lynn Blount	5.20.16	
	CHECKED MJB	5.20.16	
FINISH	ISSUED		SIZE / CAGE CODE / DRAWING NO. PW-1035 / REV
DO NOT SCALE DRAWING			SCALE / SHEET OF

REVISIONS			
REV	DESCRIPTION	DATE	CHANGED BY

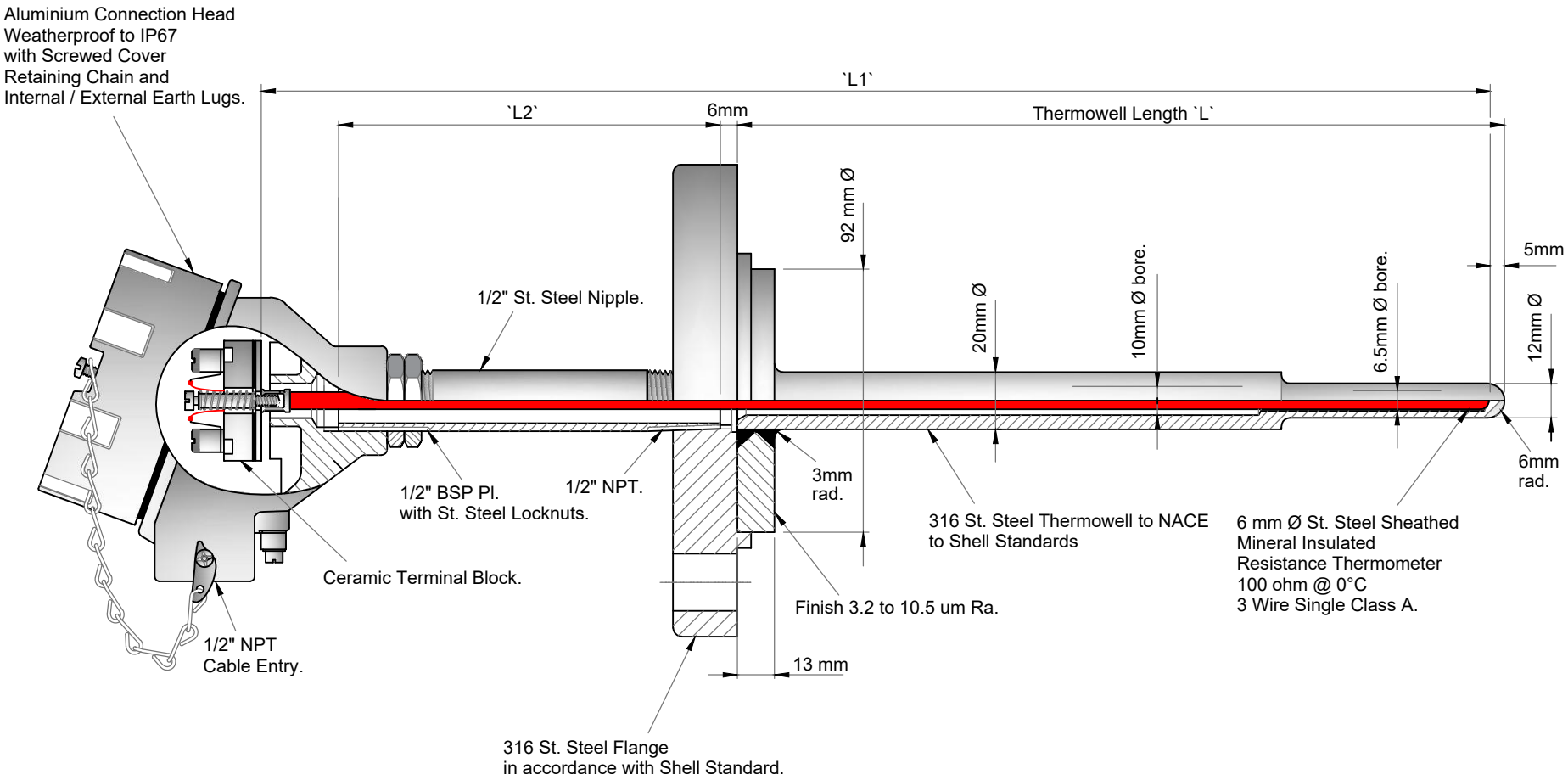

DIMENSIONS IN MM UNLESS OTHERWISE STATED. TOLERANCES – Full Millimeters +/– 0.5mm One Decimal Place +/– 0.15mm Two Decimal Places +/– 0.025mm	CONTRACT NO.		Wahl Instruments, Inc. 234 Old Weaverville Road Asheville, NC 28804
	APPROVALS	DATE	Resistance Thermometer Assembly
MATERIAL	DRAWN Lynn Blount	4.25.16	
	CHECKED MJB	4.25.16	
FINISH	ISSUED		SIZE / CAGE CODE / DRAWING NO. PW-1020 / REV
DO NOT SCALE DRAWING			SCALE / SHEET OF

REVISIONS			
REV	DESCRIPTION	DATE	CHANGED BY

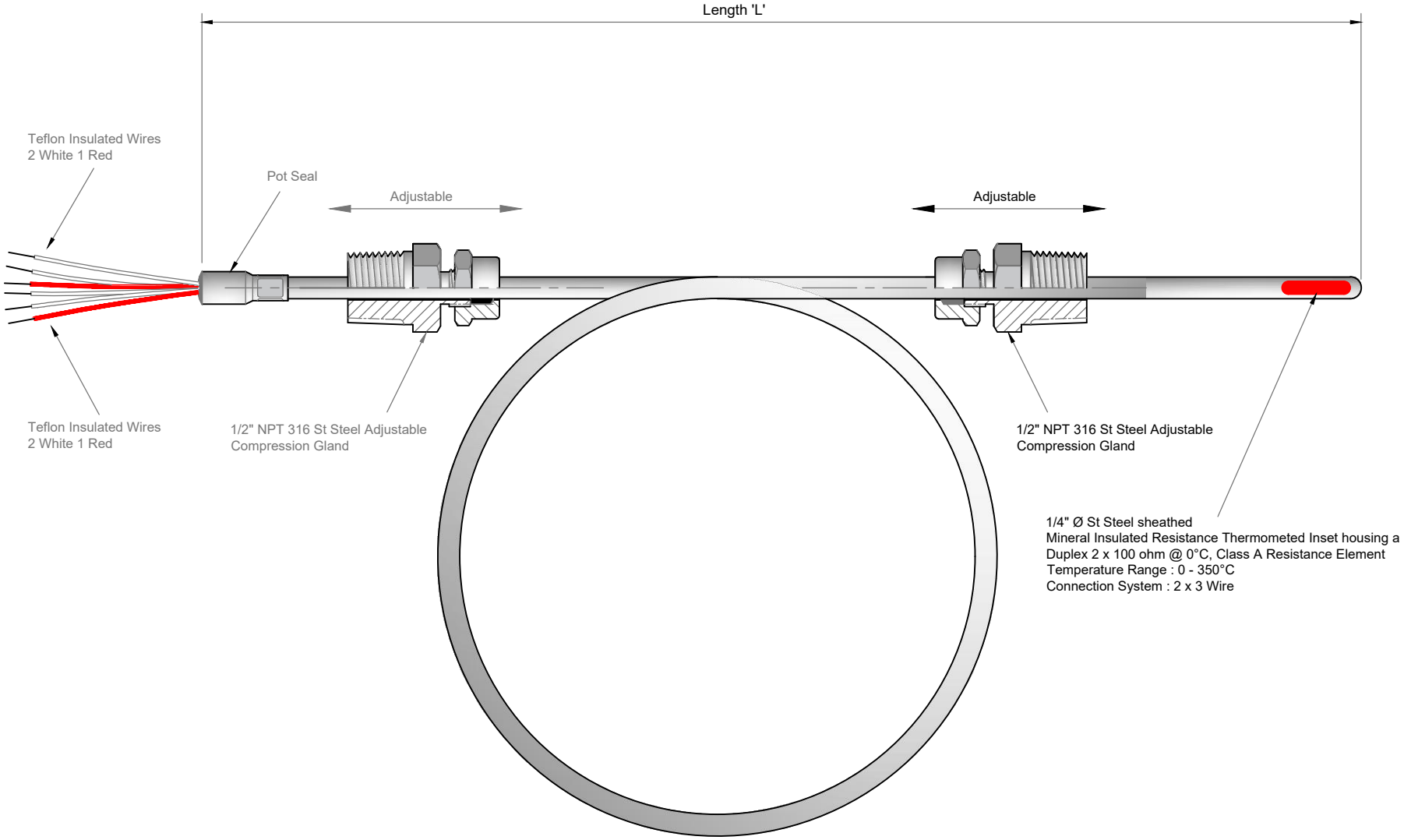

DIMENSIONS IN MM UNLESS OTHERWISE STATED. TOLERANCES – Full Millimeters +/– 0.5mm One Decimal Place +/– 0.15mm Two Decimal Places +/– 0.025mm	CONTRACT NO.		Wahl Instruments, Inc. 234 Old Weaverville Road Asheville, NC 28804
	APPROVALS	DATE	Resistance Thermometer Assembly
MATERIAL	DRAWN Lynn Blount	4.22.16	
	CHECKED MJB	4.22.16	
FINISH	ISSUED		SIZE / CAGE CODE / DRAWING NO. PW-1018 / REV
DO NOT SCALE DRAWING			SCALE / SHEET OF

REVISIONS			
REV	DESCRIPTION	DATE	CHANGED BY

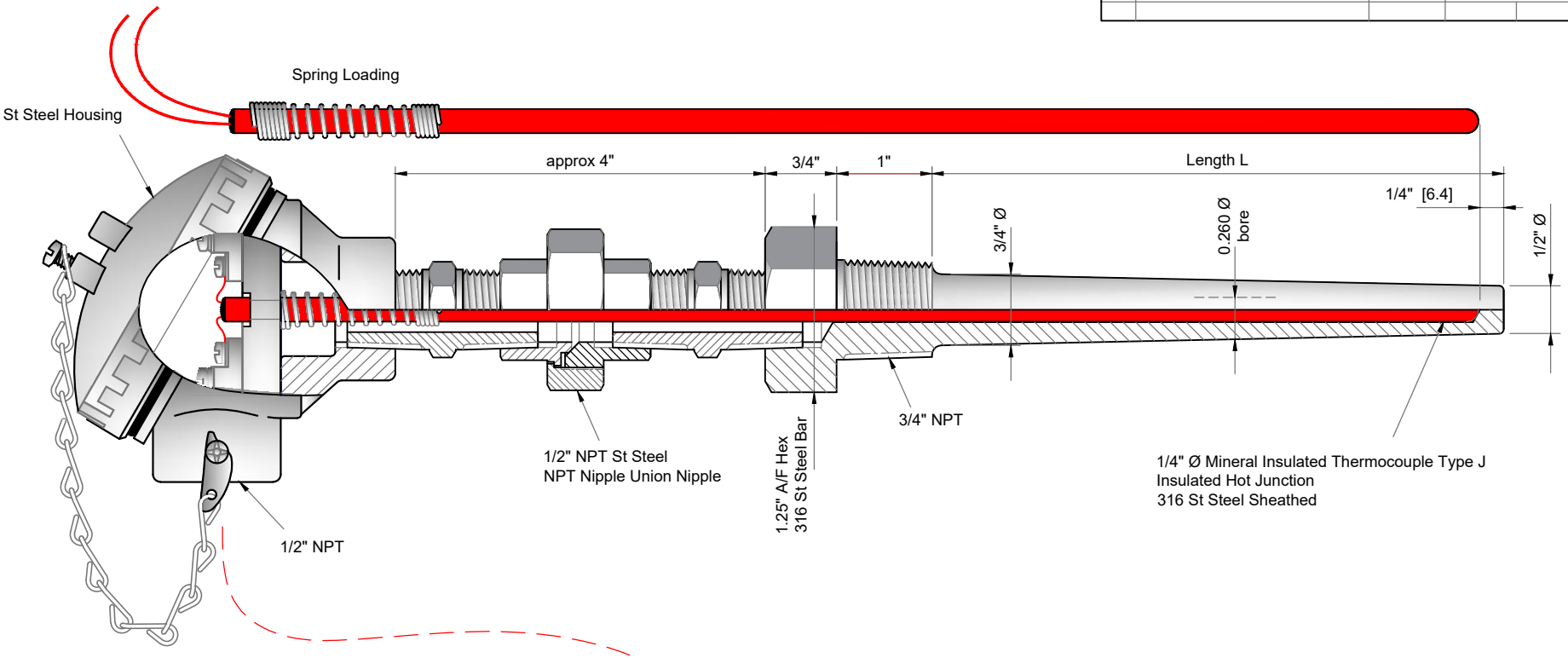

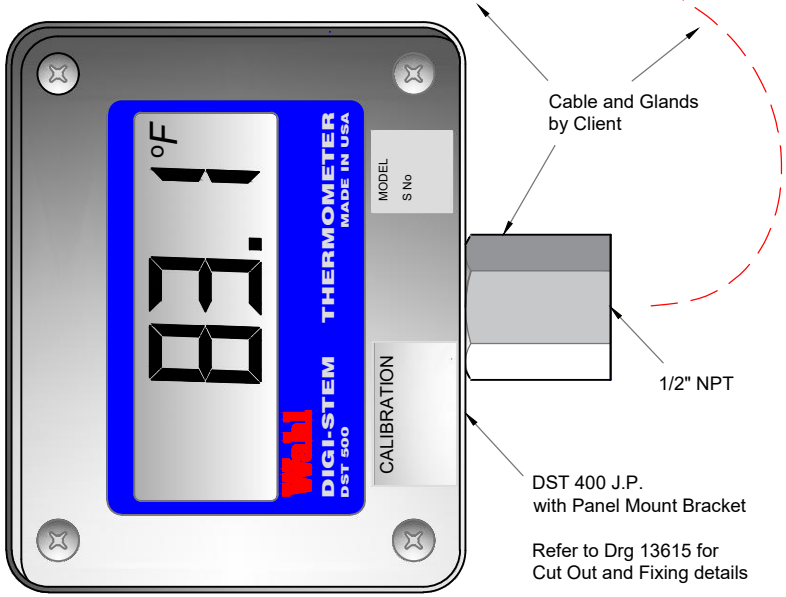

DIMENSIONS IN MM UNLESS OTHERWISE STATED. TOLERANCES – Full Millimeters +/– 0.5mm, One Decimal Place +/– 0.15mm, Two Decimal Places +/– 0.025mm	CONTRACT NO.		Wahl Instruments, Inc. 234 Old Weaverville Road Asheville, NC 28804
	APPROVALS	DATE	Industrial Thermocouple Assembly with Remote Indicator
MATERIAL	DRAWN Lynn Blount	6.23.16	
	CHECKED MJB	6.23.16	SIZE / CAGE CODE / DRAWING NO. PW-1040 / REV
FINISH	ISSUED		
DO NOT SCALE DRAWING			SCALE / SHEET OF

WAHL International Incorporated NEW Custom Design service for Industrial Temperature Sensors

' EASY PICK ' to assist design selection

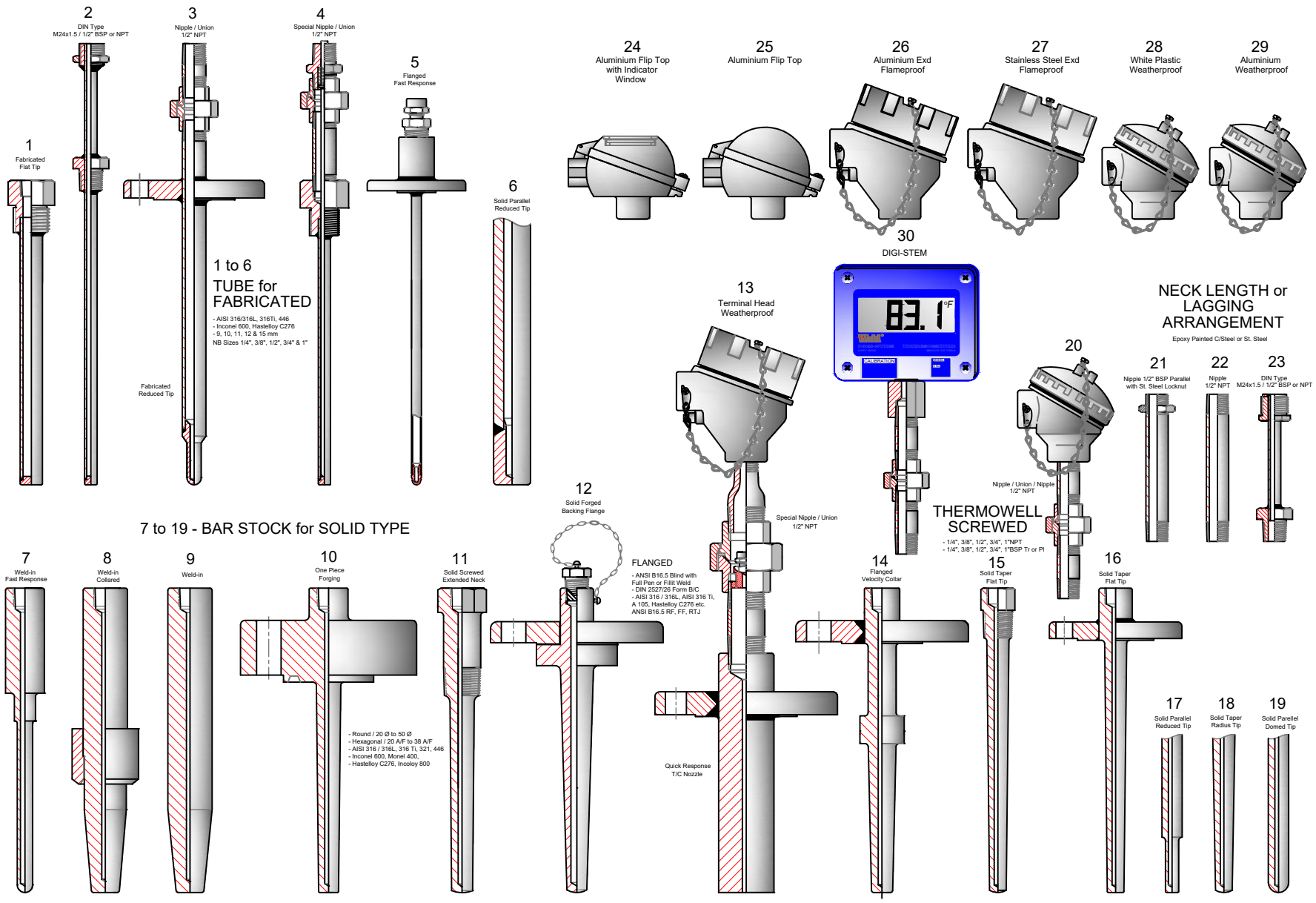

REVISIONS			
REV	DESCRIPTION	DATE	CHANGED BY

Aluminium Flip Top
with Indicator Window

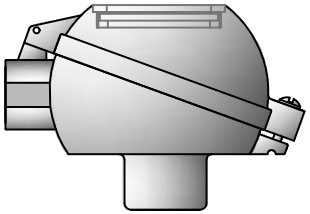

Aluminium Exd
Flameproof

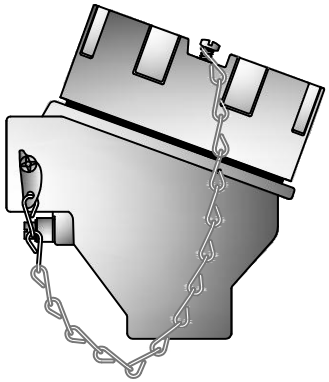

White Plastic
Weatherproof

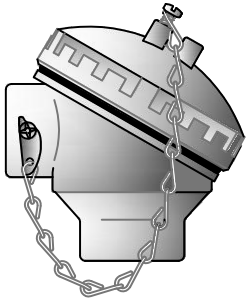

Aluminium Flip Top

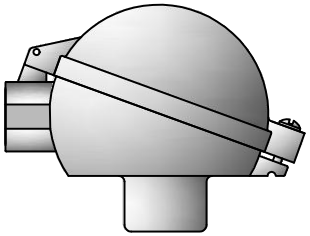

Stainless Steel Exd
Flameproof

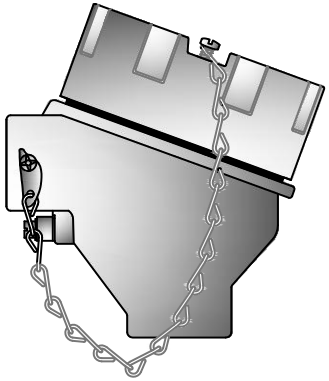

Aluminium
Weatherproof

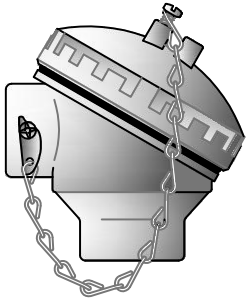

DIMENSIONS IN MM UNLESS OTHERWISE STATED. TOLERANCES – Full Millimeters +/– 0.5mm One Decimal Place +/– 0.15mm Two Decimal Places +/– 0.025mm	CONTRACT NO.		Wahl Instruments, Inc. 234 Old Weaverville Road Asheville, NC 28804
	APPROVALS	DATE	Connection Heads
MATERIAL	DRAWN Lynn Blount	12.12.16	
	CHECKED MJB	12.12.16	SIZE / CAGE CODE / DRAWING NO. PW-1091 / REV
FINISH	ISSUED		
DO NOT SCALE DRAWING			SCALE / SHEET 1 OF 4

REVISIONS			
REV	DESCRIPTION	DATE	CHANGED BY

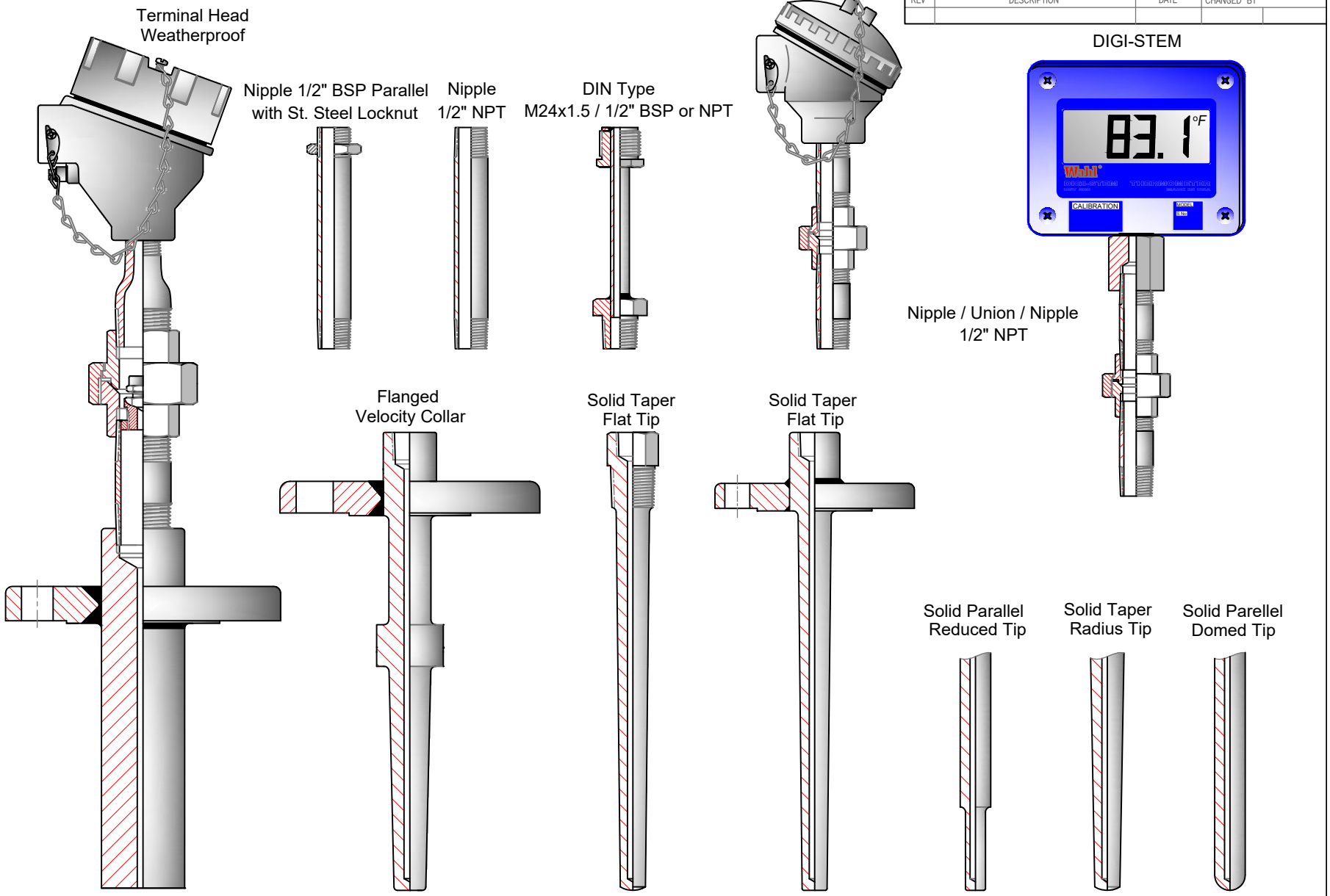

DIMENSIONS IN MM UNLESS OTHERWISE STATED. TOLERANCES – Full Millimeters +/– 0.5mm One Decimal Place +/– 0.15mm Two Decimal Places +/– 0.025mm	CONTRACT NO.		Wahl Instruments, Inc. 234 Old Weaverville Road Asheville, NC 28804
	APPROVALS	DATE	Solid Drilled Thermowell Assemblies
MATERIAL	DRAWN Lynn Blount	12.12.16	
	CHECKED MJB	12.12.16	SIZE / CAGE CODE / DRAWING NO. PW-1091 / REV
FINISH	ISSUED		
DO NOT SCALE DRAWING			SCALE / SHEET 2 OF 4

REVISIONS			
REV	DESCRIPTION	DATE	CHANGED BY

BAR STOCK for SOLID TYPE

Weld-in
Fast Response

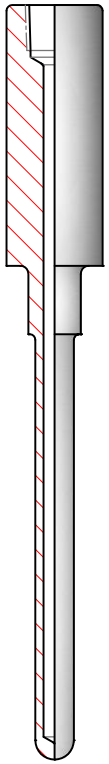

Weld-in
Collared

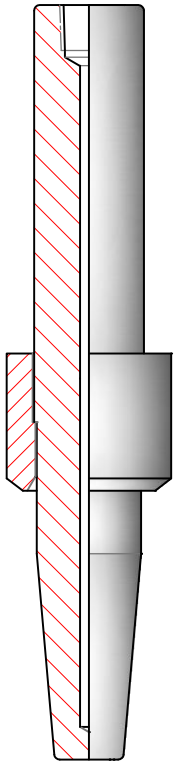

Weld-in

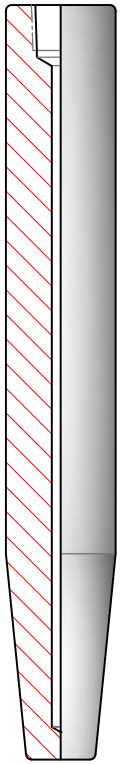

One Piece
Forging

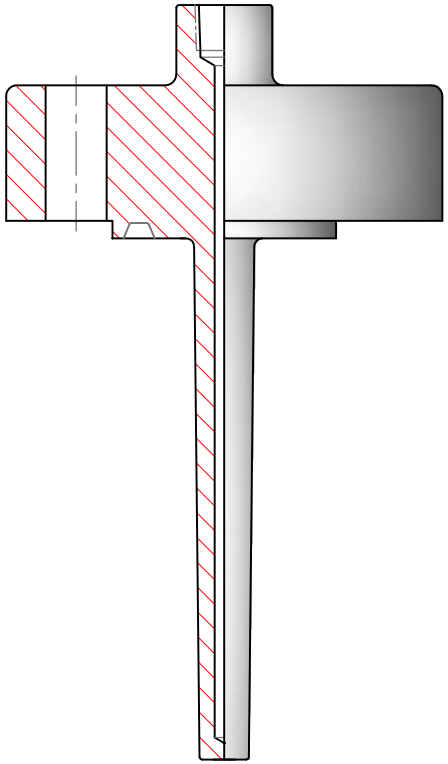

Solid Screwed
Extended Neck

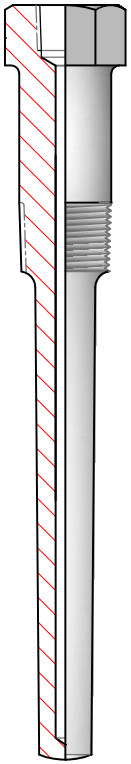

Solid Forged
Backing Flange

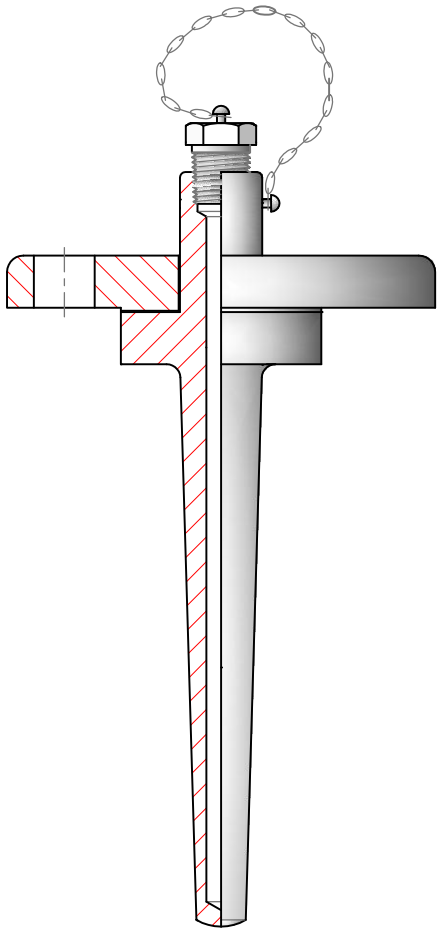

- Round / 20 Ø to 50 Ø
- Hexagonal / 20 A/F to 38 A/F
- AISI / 316L, 316 Ti, 321, 446
- Inconel 600, Monel 400
- Hastelloy C276, Incoloy 800

FLANGED
- ANSI B16.5 Blind with Full Pen or Fillit Weld
- DIN 2527/26 Form B/C
- AISI 316 / 316L, AISI 316 Ti, A 105, Hastellot C276 etc.

ANSI B 16.5 RF, FF, RTJ

DIMENSIONS IN MM UNLESS OTHERWISE STATED. TOLERANCES – Full Millimeters +/– 0.5mm One Decimal Place +/– 0.15mm Two Decimal Places +/– 0.025mm	CONTRACT NO.		Wahl Instruments, Inc. 234 Old Weaverville Road Asheville, NC 28804
	APPROVALS	DATE	Solid Drilled Thermowells
MATERIAL	DRAWN Lynn Blount	12.12.16	
	CHECKED MJB	12.12.16	SIZE / CAGE CODE / DRAWING NO. PW-1091 / REV
FINISH	ISSUED		
DO NOT SCALE DRAWING			SCALE / SHEET 3 OF 4

REVISIONS			
REV	DESCRIPTION	DATE	CHANGED BY

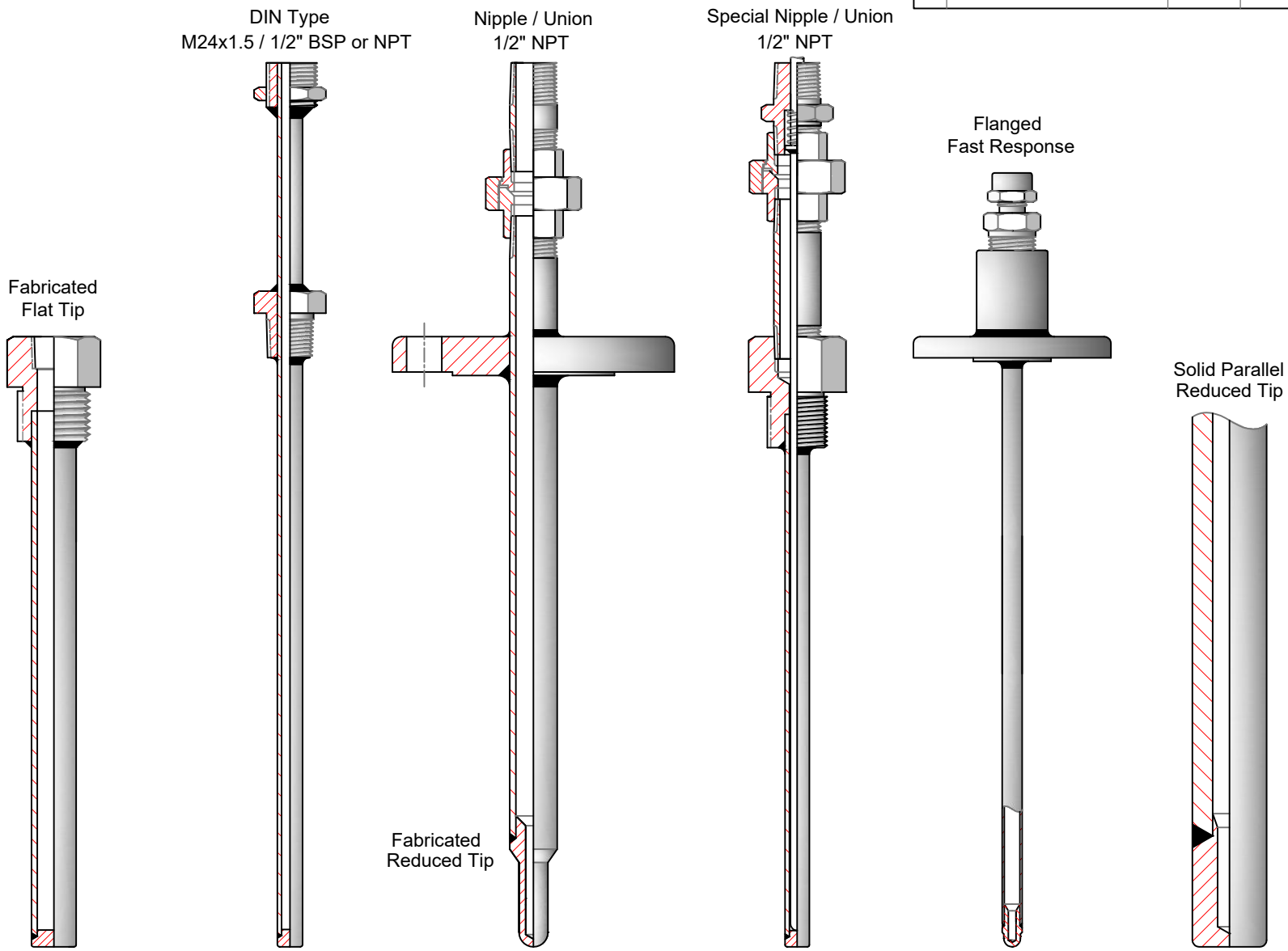

TUBE for FABRICATED - AISI 316/316L, 316Ti, 446
- Inconel 600,
- Hastelloy C276
- 9, 10, 11, 12 & 15 mm
- NB Sizes 1/4", 3/8", 1/2", 3/4" & 1"

DIMENSIONS IN MM UNLESS OTHERWISE STATED. TOLERANCES – Full Millimeters +/– 0.5mm One Decimal Place +/– 0.15mm Two Decimal Places +/– 0.025mm	CONTRACT NO.		Wahl Instruments, Inc. 234 Old Weaverville Road Asheville, NC 28804
	APPROVALS	DATE	Fabricated Thermowell Assemblies
MATERIAL	DRAWN Lynn Blount	12.12.16	
	CHECKED MJB	12.12.16	SIZE / CAGE CODE / DRAWING NO. PW-1091 / REV
FINISH	ISSUED		
DO NOT SCALE DRAWING			SCALE / SHEET 4 OF 4

SELECTION OF ENGINEERED INDUSTRIAL TEMPERATURE SENSORS

DESIGNERS, MANUFACTURERS and SUPPLIERS OF -

Mineral Insulated Thermocouples

Mineral Insulated RTD's

4-20 mA Head Mounted Transmitters

Solid Drilled Thermowells

Fabricated Thermowells

Resistance Thermometer Assemblies

Multi-Point Assemblies

Tube Skin Thermocouples

Bi-Metals

Rigid & Remote Reading Thermometers

Transmitters with Integral Indicators

COMPONENTS for PRODUCTION of TEMPERATURE PRODUCTS

Mineral Insulated
Metal Sheathed Thermocouple Cable

Mineral Insulated Metal Sheathed
Cables with Nickel & Copper Conductors
for Resistance Thermometers

T/C Compensating & Extension Cables

Connection Heads

Terminal Blocks

Pressure Entry & Cable Glands

Plugs & Sockets & Panels

PALMER WAHL QUALITY ASSURANCE INCLUDES

ISO 9001 : 2008 Certified
NIST Traceable Calibration
USD Approved
ATEX & FM Approvals
Material Certification
Full QA Manuals
Pressure Testing
Radiography
Ultrasonics
Nace Certification
Hardness Testing
Heat Treatment
Welders Qualifications
Thermowell Stress Calculations

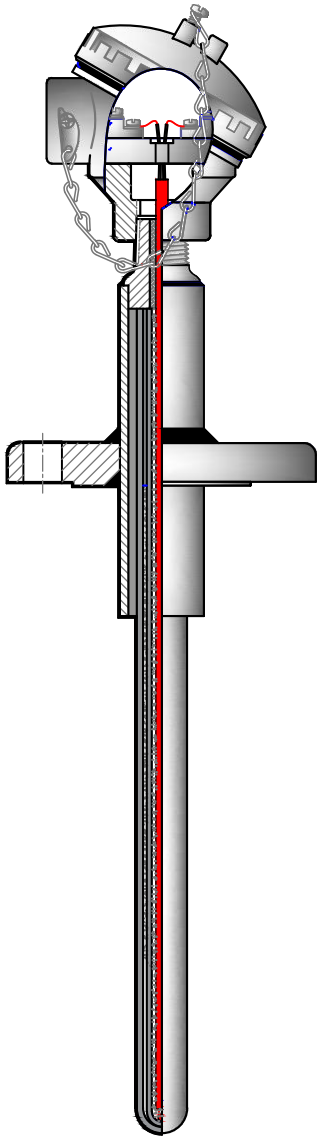

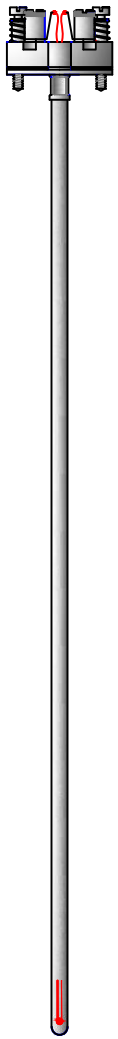

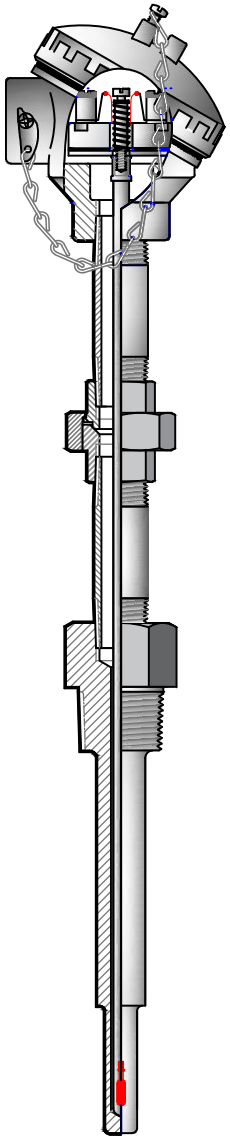

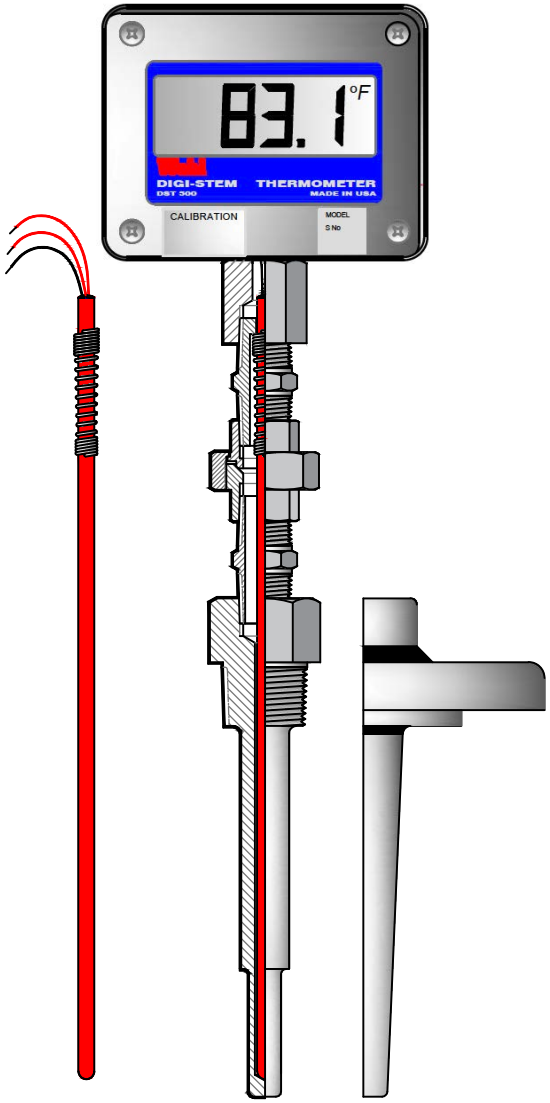

PALMER Wahl
INSTRUMENTATION GROUP

America's First Manufacturer of Precision
Industrial Temperature and Pressure Instrumentation